RF / IR Encoder / Decoder Chipset
RF Evaluation Boards,

RF600E
RF600D

- Highly Secure KEELOQ CODE HOPPING Protocol
- RF Encoder & Decoder IC's
- Simple to Use
- Stand Alone Operation
- Achieves Maximum Range from RF Modules
- 1 – 4 Switch Options (15 states)
- Decoder Serial Output
- Led Indication of Transmission
- Directly Compatible with Keeloq Decoder
- Easy Learn Feature of Transmitters
- Sleep Mode
- Up to 48 Transmitters can be Learned

- Compatible with RF Solutions Systems

Typical Applications

- General Purpose Remote Control
- Automotive alarm systems
- Gate and garage openers
- Electronic door locks
- Identity tokens
- Burglar alarm systems

Encoder

- 2.0-6.6V operation
- Automatic Battery Level Monitor
- 'Manchester' modulation
- 8 pin DIP/SOIC package

Decoder

- 18 pin DIP/SOIC package
- 4 Digital Outputs (15 States)
- Asynchronous serial interface
- 4.5V – 5.5V operation

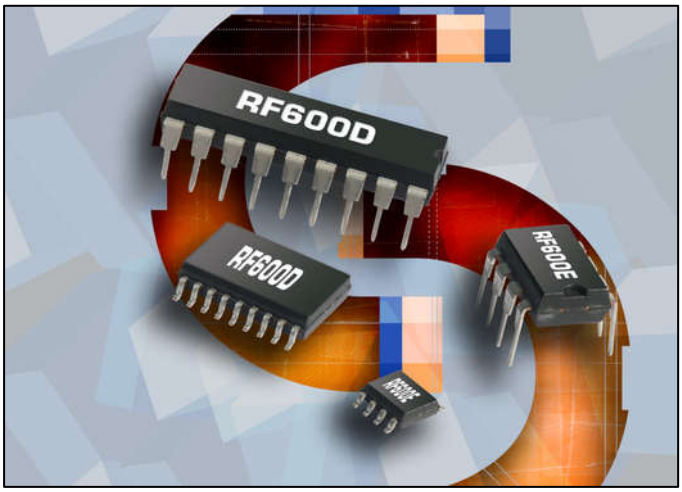

Description

The RF Solutions RF600E, & RF600D are easy to use encoder and decoder I/C's. They have been designed to achieve the maximum possible range from any radio / Infra Red transmitter receiver set.

Unlike other encoder /decoder devices the RF600E/600D provide an unprecedented level of security which prevents copying or grabbing whist also obtaining optimum range from the transmitter and receiver.

The devices are very easy to use and can be inserted directly into a circuit. The RF600D has an easy learn feature enabling it to learn up to 7 unique RF600E encoder devices in standalone mode or up to 48 encoder devices when used in conjunction with an external EEPROM.

These devices enable a simple but secure remote telemetry application whilst obtaining the maximum range from the radio set.

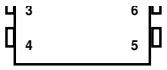

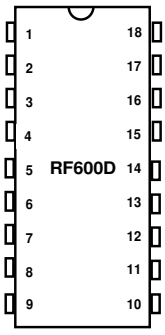

©2004 Reg. No. 227 4001, ENGLAND

Transmitter Encoder RF600E

Operational Description

The RF600E is a simple device to use. As shown in the typical application circuits, it requires only the addition of input switches and RF circuitry for use as the transmitter in the end application. Transmission is automatic without user intervention.

The RF600E will wake up upon detecting a switch closure and then delay approximately 6.5 ms for switch debounce. The encrypted or hopping code portion of the transmission will change every time a button is pressed, even if the same button is pushed again.

Achieving Optimum Range

Range is dependant on many factors including
1. RF Power output
2. Receiver sensitivity
3. Antenna efficiency
4. Local environmental conditions and any local Interference
5. Data Type which is being transmitted.

Whilst items 1-4 are dependant on the system hardware design, item '5' is equally important and often overlooked.
Given that there is a legal maximum power output which can be transmitted, and a limit on the sensitivity of the receiver (usually constrained by cost), and that the antenna can never achieve 0dB loss (100% efficiency), then the data type is an important aspect of the design.

The RF600E/D chipset use a fully balanced Manchester encoded data protocol designed for optimum use of the radio transmission path.

The data format automatically includes a pre-amble, synchronisation header, followed by the encrypted and fixed code data then a CRC check. The actual packet size is 67 bits. Each transmission is followed by a guard period before another transmission can begin.

The data encryption provides up to four billion changing code combinations and includes the function bits (based on which buttons were activated) along with other data and synchronization information that the decoder uses.

Manchester encoding the data enables the superhetrodyne receiver 'data slicer' to maintain efficiency for the duration of the data packet, (unlike many other encoder/decoder systems) which results in reduced bit errors and therefore ensures maximum range.

Low Battery Indication

The RF600E reads the battery status (voltage) on each operation. If the voltage is detected as being below 3.8 volts (typical) then a flag bit is transmitted to the decoder where it is made available.

Custom Versions

Custom versions of the RF600E / D chipset are available, programmed with a unique 'Manufacturers Key' which means that the transmitter and receiver will respond only to other devices with the same unique manufacturers key. This provides a bespoke remote chipset for OEM applications. Please contact our sales department for further information.

©2004 Reg. No. 227 4001, ENGLAND

Pin Descriptions

Name	Pin Number	Description
S0	**1**	Switch input 0
S1	**2**	Switch input 1
S2	**3**	Switch input 2
S3	**4**	Switch input 3
Vss	**5**	Ground reference connection
OP	**6**	Data output
LED	**7**	Cathode connection for directly driving LED during transmission
Vcc	**8**	Positive supply voltage connection

S0-3

These are the switch inputs which when operated wake up the RF600E and cause transmission. They may be switched directly to Vcc. Transmission occurs for the duration of the switch operation.

Vcc / Vss

The power supply needs to be a stable regulated voltage with <10mV ripple. Note that in idle mode the transmitter current drain is typically only 100nA.

OP

Data Output, this is a standard CMOS / TTL output that may be connected directly to the data input pin of the RF Module. In the event that this represents a load to Vcc then a buffer stage between the data output and the RF module will be required.

LED

A direct LED drive with internal current limit of typically 1 mA operates when the RF600E is transmitting.

Typical Application Circuit Diagram for FM radio modules

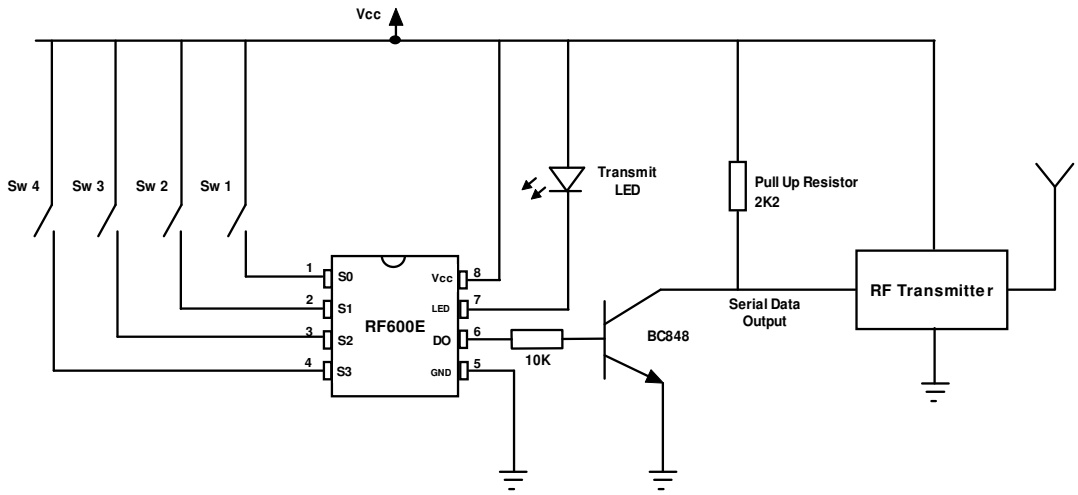

Not that a circuit constructed using AM radio modules does not need to have transistor BC848, resistor 10K or 2k2 Pull up resistor fitted.

©2004 Reg. No. 227 4001, ENGLAND

Receiver Decoder RF600D

Operational Description

The RF600D is simple to use. As shown in the typical application circuits, in the stand alone operation the RF600D has the capability to learn up to 7 unique RF600E transmitters. With the addition of an EEPROM memory device this is increased to 48 RF600E encoders.

The RF600D requires only the addition of the following components

1. A **'learn' switch** which is used in the process of learning a transmitter/encoder to the decoder and also to initiate erasure of encoder information.
2. An **LED** which indicates the status of the learn process, the erase process and also data reception status.
3. An **option link** resistor which allows configuration for AM or FM data reception. (data mark selection).
4. An **option link** resistor which allows selection of 4 momentary or 4 latched outputs. This input may simply be tied to Vcc or GND to fix the output operation.

The RF600D may operate with an external 96C76 EEPROM device as additional memory to store identity information of transmitter/encoders. Data stored within the EEPROM is encrypted to maintain security. Each RF600D+EEPROM combination can learn up to 48 unique transmitter/encoders.

The RF600D is connected directly to the data output of a radio receiver module and upon detection of a valid data packet it will decode the Keeloq encrypted data stream. When an address match occurs the RF600D asserts its 4 digital outputs. These will match the state of the RF600E encoder's 4 digital inputs at the time of transmission. An additional output, which shows the status of the encoder battery, is also asserted.

The digital outputs may be configured as latching or momentary action. (Latch = the output will change state on each successive transmit of the encoder. Momentary = the output will only operate for as long as the RF600E encoder is transmitting).

EEPROM storage

When the RF600D is used in its internal eeprom mode it can learn the identity of up to 7 transmitters. If required, an external 96C76 eeprom can be connected as shown below and this will be automatically detected by the device and will allow the decoder to learn the identity of up to 48 transmitters.

Serial Data Output

The RF600D has a serial data output. This outputs the serial number, button and battery status of the transmitter encoder (RF600E) it has successfully received. It also gives an indication of which inputs of the encoder have been activated and the status of the encoder battery. This data may be fed directly to a microcontroller or RS232 type driver circuit which may then be fed directly to a PC serial port. (An RS232 serial data output is provided on SA123 & RFEVAL2).

Serial data is output continually whilst data is being received from the RF600E transmitter. i.e. this output is valid regardless of whether the RF600E encoder has been learnt to the RF600D decoder or not. If the user requires the serial number of pre-learnt RF600E encoders only, then the serial output should be configured only to output data when one of the digital outputs from the RF600D is asserted. (Digital outputs from the RF600E will only activate when a RF600E encoder has been pre-learnt.)

The data received by RF600D (from the RF600E encoder) is checked for correct Manchester coding (it is not KeeLoq decrypted) and the following data is output from the SD1 pin.

- The 7 digit KeeLoq serial number.
- The KeeLoq button data and transmitter battery state.
- A carriage return character and a line feed character.

©2004 Reg. No. 227 4001, ENGLAND

Serial Data Format

Serial Data is sent as a stream of ASCII characters at 9.6K baud. The character format is 8 data bits with 1 stop bit, no parity.

A serial data string is output every time a valid transmitter packet is received. Due to the nature of the KeeLoq packet there will be a min gap between each serial data string of 150mSec.
10 characters are sent with the following format;

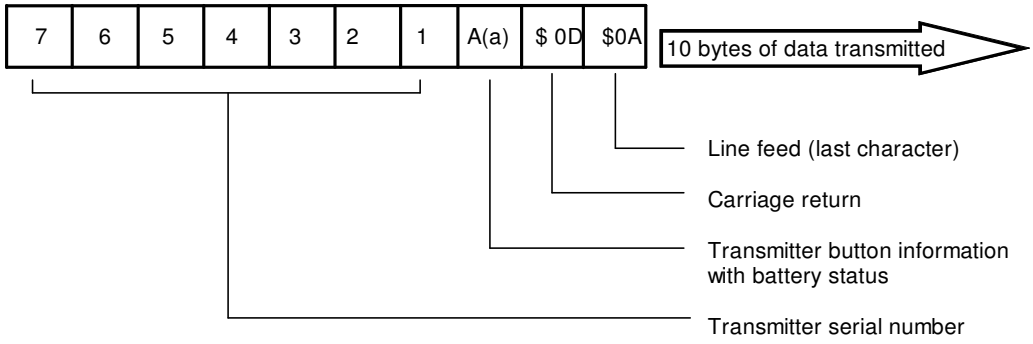

Output from SD1 pin

The Transmitter Serial Number : is made up of 7 ASCII characters from the following group: 0 1 2 3 4 5 6 7 8 9 A B C D E F. The most significant serial number digit is transmitted first. This provides a total of 28million possible serial numbers.

The KeeLoq Button Status is transmitted as an ASCII character in the range A to O or if the low battery bit is asserted (encoder battery is low) then in the range a to o. KeeLoq data bits S0, S1, S2 and S3 then make up the ASCII byte least significant bits D0, D1, D2 and D3.

If a single encoder button is pressed, say S0, then character A will be sent (or if low battery, a).

If encoder button S1 is pressed then B (or b) will be sent.

If S0 and S1 are both pressed simultaneously then character C (or c) will be sent.

If all KeeLoq encoder buttons are simultaneously pressed then character O (or o) will be sent.

Examination of the ASCII bit patterns shows that this allows single or multiple encoder button presses to be decoded by the ASCII receiving device.

Examples of Serial Data output:

For a three button keyfob with serial number 2345678, the serial data output when encoder transmission is decoded would be as follows:

If S1 is pressed: 2345678A (2345678a if the battery voltage in the transmitter is low)

If S2 is pressed: 2345678B (2345678b if the battery voltage in the transmitter is low)

If S1 and S2 are pressed together: 2345678C (2345678c if the battery voltage in the transmitter is low)

If S4 is pressed: 2345678H (2345678h if the battery voltage in the transmitter is low)

©2004 Reg. No. 227 4001, ENGLAND

Pin Descriptions

Pin Number	Name	Input / Output?	Description
1	**OP3**	Out	Data Output 3 (S2)
2	**OP4**	Out	Data Output 4 (S3)
3	**LB**	Out	Low Battery, goes Low when Low Battery Valid
4	**Vcc**	In	Positive supply voltage connection
5	**Vss**	In	Connect to GND
6	**ECS**	Out	Connects to EEPROM 'CS' pin
7	**ECLK**	Out	Connects to EEPROM 'CLK' pin. Also sets data mark.
8	**EDAT**	In / Out	Connects to EEPROM 'Data' pin
9	**IN**	In	RF / IR Data input
10	**LRN**	In	Learn / Erase Switch Input & Status LED Drive
11	**SD1**	Out	Serial Data output
12	**LKIN**	In	Option Link Input for Momentary or Latched outputs
13	**SLEEP**	In	High = Run, Low = Sleep Mode
14	**Vcc**	In	Positive supply voltage connection
15	**Unused**	N/A	No Connection
16	**Unused**	N/A	No Connection
17	**OP1**	Out	Data Output 1 (S0)
18	**OP2**	Out	Data Output 2 (S1)

Vcc / Vss

The power supply needs to be a stable regulated voltage with <10mV ripple

OP1-4

Digital Data outputs 1-4. These outputs are asserted LOW when the relevant inputs (S0 – S3) on the RF600E are asserted. (see latch/unlatch information under 'LKIN').

LB

The RF600E automatically measures the battery voltage each time it is operated (see RF600E data). This information is transmitted to the RF600D and if a low battery condition exists then the low battery output is taken low. This indication is latched until data from a decoder with a good battery is received at which time the output indication is cleared. (output goes high).

ECS / ECLK / EDAT

These connections are for interface to the EEPROM, which is used to store the identity of the encoders taught to the system.

ECLK AM / FM Selection

Note that the ECLK output to the EEPROM is also used for data mark selection. The data mark input sets the input of the RF600D to be compatible with AM or FM radio modulation.

When the ECS control line is low (i.e. when the EEPROM is not selected) the ECLK line is made an input and a check is made for the presence of a pull-down or pull-up resistor.

If the data mark selection is pull-down then the RF600D will be set to receive Sync Low AM data.

If the data mark selection is pull-up then the RF600D will be set to receive Sync High FM and IR data.

©2004 Reg. No. 227 4001, ENGLAND

IN

This is the data input to the decoder, it may be connected directly to the RF receiver module or IR receiver module.

LRN

This input is used to set the decoder module to 'Learn Mode' and for the 'Erase Function' and is also used to drive the Status LED.

Learn Mode: is achieved by pulling this input to GND briefly

Erase Mode: is achieved by pulling this input to GND for >8 seconds. This causes the EEPROM to be erased of all pre-learnt RF600E encoders.

Learn Operation using momentary push switch (As application circuit)

1. Press briefly and release the learn switch
2. The status LED will illuminate while the switch is pressed and remain on when released.
3. Operate the transmitter encoder once, status LED on the decoder will extinguish
4. Operate the transmitter encoder a second time, status LED on the decoder will flash
5. After the status LED has stopped flashing the transmitter has been successfully taught to the decoder
6. This transmitter will now operate the system

Up to 7 unique encoders may be learnt to each RF600D. This can be extended to 48 encoders with the use of the 93C76 EEPROM.

Erase Operation using momentary push switch (As application circuit)

To completely erase all transmitter data, press and hold the learn switch on the decoder for 8 seconds. The status LED will illuminate continuously whilst the switch is held down and then flash while the decoder erases all memory. It may take several seconds until the erase function is complete. After the status LED is extinguished all the encoder identities are erased from the decoders eeprom memory.

SD1

Outputs serial ASCII data after each valid transmitter signal. (See previous section for more information)

LKIN

This high impedance input is used to set the digital outputs to momentary or latched actions

LKIN Status	Digital Outputs Function
High	Latching
Low	Momentary

Momentary : Output is only asserted for the duration of the valid transmit signal.

Latching: Output state is changed on each valid transmitted signal.

NB The outputs S0 – S3 can only be operated after a RF600E encoder has been learnt to the RF600D decoder.

©2004 Reg. No. 227 4001, ENGLAND

SLEEP

Holding this pin high will causes the device to run normally. Holding this pin low will causes the device to enter a sleep mode where the current drain will be 1µA (typically). Taking the pin high will cause the device to run normally.

Grounding the learn/LED pin (10) will cause the device to wake from sleep and service either a learn or erase request: on completion of the function the device will re-enter sleep mode.

Note that while in sleep mode the S0 – S4 and low battery outputs will held high.

Notes to obtain Minimal Current consumption

Sleep/run applications will require close attention to external circuitry in order to minimise the sleep current and allow a typical circuit draw of 1µA at +5 volts (with/without optional external eeprom).

With reference to the application schematic, the following should be noted;

1. Fit an additional 2.2MΩ resistor from pin 10 to +5 volts.
2. Fit an additional 2.2MΩ resistor from pin 3 to +5 volts.
3. Connect controlling drive to pin 13: high for run and low for sleep.
4. The S0 – S4 and low battery outputs are not asserted during sleep and will have to be sampled by the controlling micro controller during run mode.
5. The S0 – S4 and low battery LED's are not required as part of the circuit and can be omitted of required.
6. Incoming data mark selection on pin 7 MUST be by a resistor (typically 22K) to either +5 or ground and NOT by a direct connection.
7. The RF/IR data input (pin 9) must be at a valid logic level at all times. In sleep mode, if this input is allowed to float then significant device current may flow.

©2004 Reg. No. 227 4001, ENGLAND

RF600D Application Circuit – Stand Alone operation

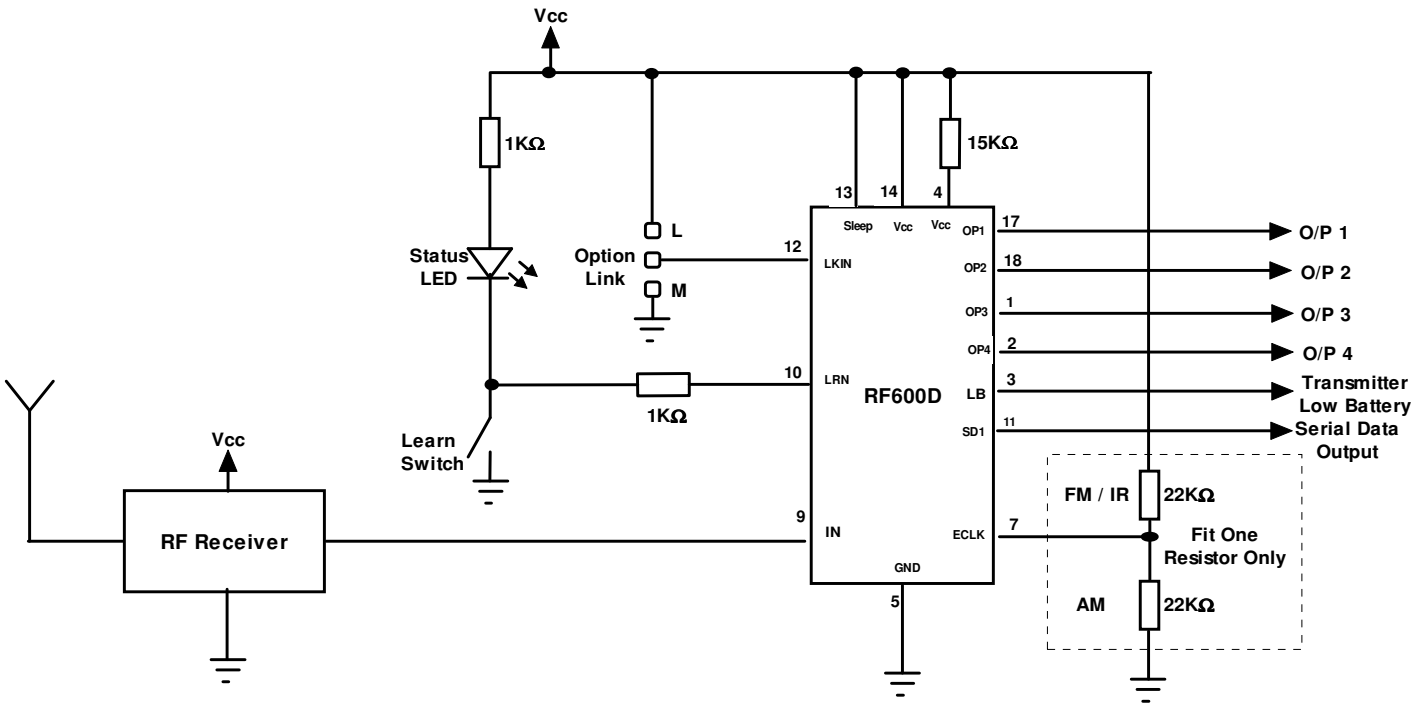

This circuit provides a complete decoding solution capable of learning up to 7 unique encoders

©2004 Reg. No. 227 4001, ENGLAND

RF600D Application Circuit – With External EEPROM

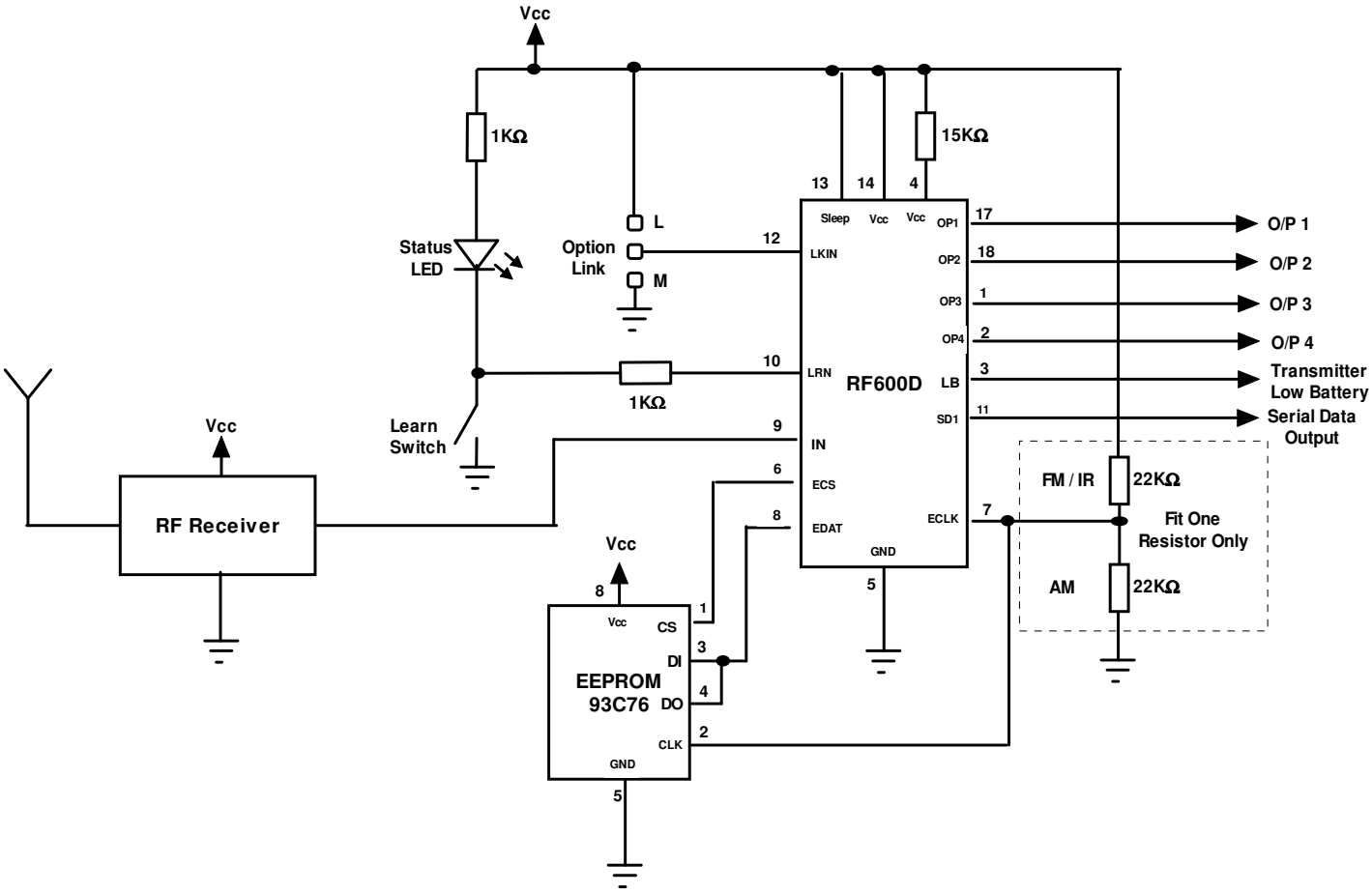

This circuit provides a complete decoding solution capable of learning up to 48 unique encoders

A complete 'ready to operate' board using this circuit is available please see SA123 later in this datasheet

©2004 Reg. No. 227 4001, ENGLAND

Technical Specifications: Absolute Maximum Ratings

Item	Rating	Units
Supply voltage	-0.3 to 6.9	V
Input voltage	-0.3 to VDD + 0.3	V
Output voltage	-0.3 to VDD+ 0.3	V
Max output current	25	mA
Storage temperature	-55 to +125	℃ (Note)
Lead soldering temp	300	℃ (Note)
ESD rating	4000	V

Note: Stresses above those listed under "Absolute Maximum Ratings" may cause permanent damage to the device.

RF600E Transmitter Encoder

Electrical Characteristics	Min	Typical	Max	Unit
Operating current(avg) Vdd = 2 - 3V Vdd = 3 - 6.6V		 0.3 0.7	 1.2 1.6	mA
Standby current		0.1	1.0	µA
High level Input voltage	$0.55V_{DD}$		V_{DD}+0.3	V
Low level input voltage	0.3		$0.15V_{DD}$	V
High level output voltage	$0.7V_{DD}$			V
Low level output voltage			$0.08V_{DD}$	V
LED sink current	0.15	1.0	4.0	mA
RF Raw Data transmit Rate		2.5		KHz

RF600D Receiver Decoder

Electrical Characteristics	Min	Typical	Max	Unit
Operating current(avg) Vdd = 3V Vdd = 5V		1.8	3.3	mA
Standby current		1.8	3.3	µA
High level Input voltage	.45 Vdd		Vdd	V
Low level input voltage	Vss		.2Vss	V
High level output voltage	Vdd-0.7			V
Low level output voltage			0.6	V
Output Pin Current rating		1.0		mA
LED sink current			2	mA
Momentary Output min Time of operation	350			mS

RF600E / 600D System Characteristics

Electrical Characteristics	Min	Typical	Max	Unit
Time from RF600E input operation to RF600D Output asserted		135	210	mS
Time from RF600E input released to RF600D Output released	140	210	300	mS

©2004 Reg. No. 227 4001, ENGLAND

Ordering Information

Part Number	Description	Package
RF600E	Encoder IC	8pin PDIP
RF600E-SO	Encoder IC	8pin SO-8
RF600D	Decoder IC	18pin PDIP
RF600D-SO	Decoder IC	18pin SO-8
RF600D8	Decoder IC Serial output only	8pin PDIP
RF600D-SO8	Decoder IC Serial Output only	8pin SO-8

RF600DP8 / RF600DS8

The Decoder is available as a miniature 8 pin version option providing a serial data output only. These devices are designed for small space applications requiring a low cost solution.

RF600D 8 Pin version

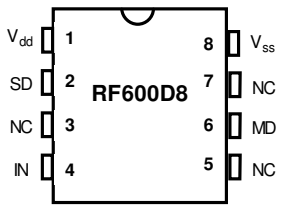

Pin Descriptions

Pin Number	Name	Input / Output?	Description
1	**Vcc**	In	Positive supply voltage connection
2	**SD**	Out	Serial Data output
3	**NC**	-	No connection
4	**IN**	In	RF / IR Data input
5	**NC**	-	No connection
6	**MS**	Input	Mark Select For FM / IR connect to Vcc For AM connect to Gnd
7	**NC**	-	No connection
8	**Vss**	In	Connect to GND

©2004 Reg. No. 227 4001, ENGLAND

Packaging Diagrams and Parameters

8-Lead Plastic Dual In-line (P) – 300 mil (PDIP)

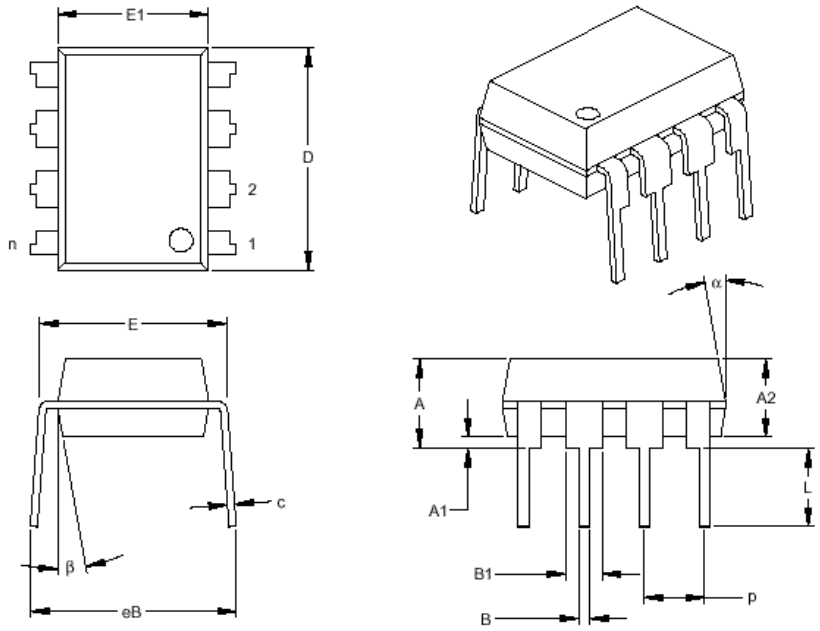

Units		INCHES*			MILLIMETERS		
Dimension Limits		MIN	NOM	MAX	MIN	NOM	MAX
Number of Pins	n		8			8	
Pitch	p		.100			2.54	
Top to Seating Plane	A	.140	.155	.170	3.56	3.94	4.32
Molded Package Thickness	A2	.115	.130	.145	2.92	3.30	3.68
Base to Seating Plane	A1	.015			0.38		
Shoulder to Shoulder Width	E	.300	.313	.325	7.62	7.94	8.26
Molded Package Width	E1	.240	.250	.260	6.10	6.35	6.60
Overall Length	D	.360	.373	.385	9.14	9.46	9.78
Tip to Seating Plane	L	.125	.130	.135	3.18	3.30	3.43
Lead Thickness	c	.008	.012	.015	0.20	0.29	0.38
Upper Lead Width	B1	.045	.058	.070	1.14	1.46	1.78
Lower Lead Width	B	.014	.018	.022	0.36	0.46	0.56
Overall Row Spacing	eB	.310	.370	.430	7.87	9.40	10.92
Mold Draft Angle Top	α	5	10	15	5	10	15
Mold Draft Angle Bottom	β	5	10	15	5	10	15

*Controlling Parameter

Notes:
Dimensions D and E1 do not include mold flash or protrusions. Mold flash or protrusions shall not exceed .010" (0.254mm) per side.

JEDEC Equivalent: MS-001
Drawing No. C04-018

©2004 Reg. No. 227 4001, ENGLAND

Packaging Diagrams and Parameters

18-Lead Plastic Dual In-line (P) – 300 mil (PDIP)

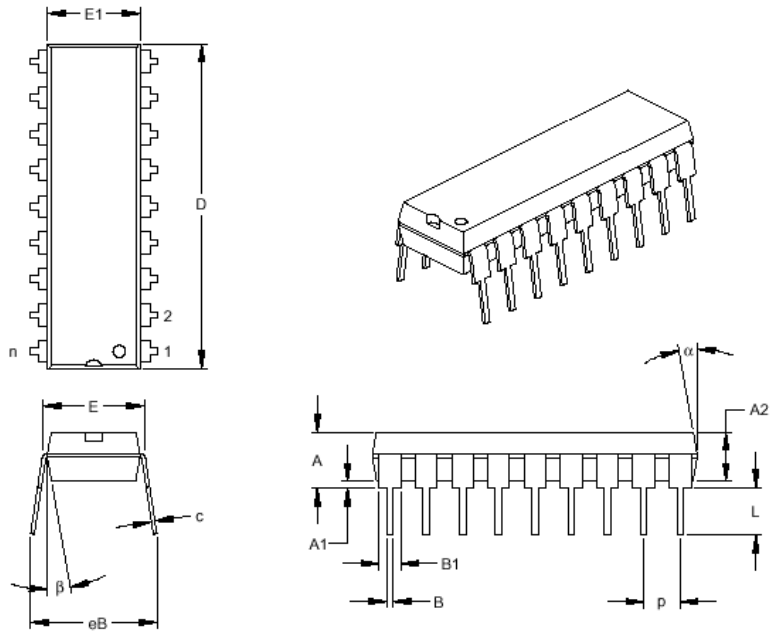

Units		INCHES*			MILLIMETERS		
Dimension Limits		MIN	NOM	MAX	MIN	NOM	MAX
Number of Pins	n		18			18	
Pitch	p		.100			2.54	
Top to Seating Plane	A	.140	.155	.170	3.56	3.94	4.32
Molded Package Thickness	A2	.115	.130	.145	2.92	3.30	3.68
Base to Seating Plane	A1	.015			0.38		
Shoulder to Shoulder Width	E	.300	.313	.325	7.62	7.94	8.26
Molded Package Width	E1	.240	.250	.260	6.10	6.35	6.60
Overall Length	D	.890	.898	.905	22.61	22.80	22.99
Tip to Seating Plane	L	.125	.130	.135	3.18	3.30	3.43
Lead Thickness	c	.008	.012	.015	0.20	0.29	0.38
Upper Lead Width	B1	.045	.058	.070	1.14	1.46	1.78
Lower Lead Width	B	.014	.018	.022	0.36	0.46	0.56
Overall Row Spacing	eB	.310	.370	.430	7.87	9.40	10.92
Mold Draft Angle Top	α	5	10	15	5	10	15
Mold Draft Angle Bottom	β	5	10	15	5	10	15

*Controlling Parameter

Notes:
Dimensions D and E1 do not include mold flash or protrusions. Mold flash or protrusions shall not exceed .010" (0.254mm) per side.

JEDEC Equivalent: MS-001
Drawing No. C04-007

©2004 Reg. No. 227 4001, ENGLAND

Packaging Diagrams and Parameters

8-Lead Plastic Small Outline (SN) – Narrow, 150 mil (SOIC)

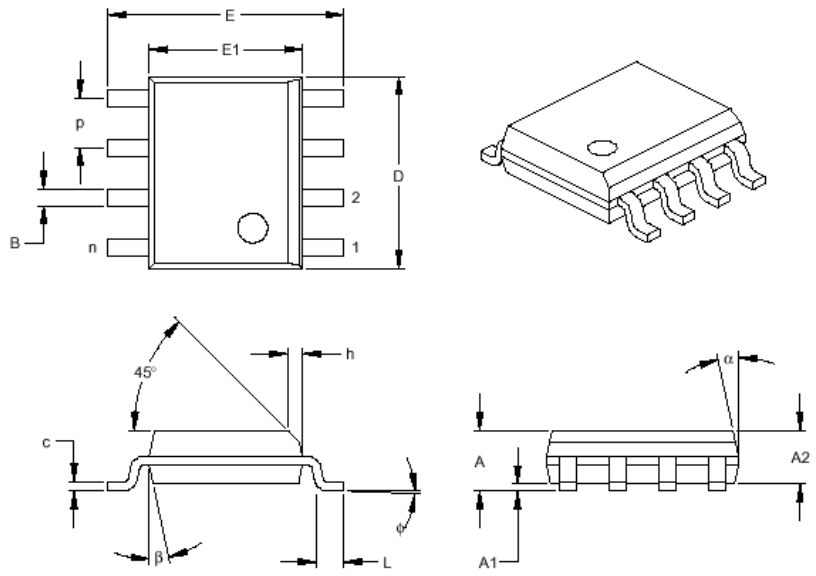

Units		INCHES*			MILLIMETERS		
Dimension Limits		MIN	NOM	MAX	MIN	NOM	MAX
Number of Pins	n		8			8	
Pitch	p		.050			1.27	
Overall Height	A	.053	.061	.069	1.35	1.55	1.75
Molded Package Thickness	A2	.052	.056	.061	1.32	1.42	1.55
Standoff	A1	.004	.007	.010	0.10	0.18	0.25
Overall Width	E	.228	.237	.244	5.79	6.02	6.20
Molded Package Width	E1	.146	.154	.157	3.71	3.91	3.99
Overall Length	D	.189	.193	.197	4.80	4.90	5.00
Chamfer Distance	h	.010	.015	.020	0.25	0.38	0.51
Foot Length	L	.019	.025	.030	0.48	0.62	0.76
Foot Angle	φ	0	4	8	0	4	8
Lead Thickness	c	.008	.009	.010	0.20	0.23	0.25
Lead Width	B	.013	.017	.020	0.33	0.42	0.51
Mold Draft Angle Top	α	0	12	15	0	12	15
Mold Draft Angle Bottom	β	0	12	15	0	12	15

*Controlling Parameter

Notes:
Dimensions D and E1 do not include mold flash or protrusions. Mold flash or protrusions shall not exceed .010" (0.254mm) per side.

JEDEC Equivalent: MS-012
Drawing No. C04-057

©2004 Reg. No. 227 4001, ENGLAND

Packaging Diagrams and Parameters

18-Lead Plastic Small Outline (SO) – Wide, 300 mil (SOIC)

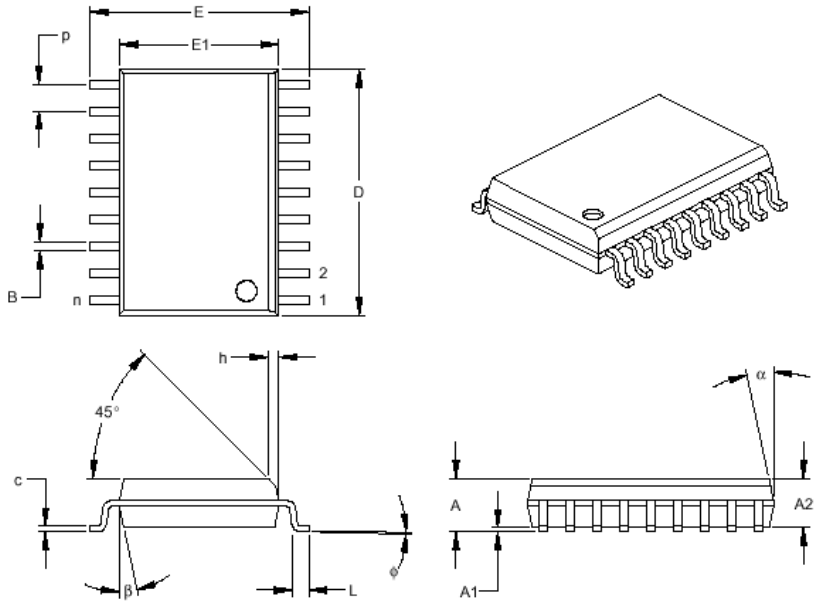

Units		INCHES*			MILLIMETERS		
Dimension Limits		MIN	NOM	MAX	MIN	NOM	MAX
Number of Pins	n		18			18	
Pitch	p		.050			1.27	
Overall Height	A	.093	.099	.104	2.36	2.50	2.64
Molded Package Thickness	A2	.088	.091	.094	2.24	2.31	2.39
Standoff	A1	.004	.008	.012	0.10	0.20	0.30
Overall Width	E	.394	.407	.420	10.01	10.34	10.67
Molded Package Width	E1	.291	.295	.299	7.39	7.49	7.59
Overall Length	D	.446	.454	.462	11.33	11.53	11.73
Chamfer Distance	h	.010	.020	.029	0.25	0.50	0.74
Foot Length	L	.016	.033	.050	0.41	0.84	1.27
Foot Angle	φ	0	4	8	0	4	8
Lead Thickness	c	.009	.011	.012	0.23	0.27	0.30
Lead Width	B	.014	.017	.020	0.36	0.42	0.51
Mold Draft Angle Top	α	0	12	15	0	12	15
Mold Draft Angle Bottom	β	0	12	15	0	12	15

*Controlling Parameter

Notes:
Dimensions D and E1 do not include mold flash or protrusions. Mold flash or protrusions shall not exceed .010" (0.254mm) per side.

JEDEC Equivalent: MS-013
Drawing No. C04-051

R. F. Solutions Ltd.,
Unit 21, Cliffe Industrial Estate,
Lewes, E Sussex, BN8 6JL, England
Tel +44 (0)1273 898 000 Fax +44 (0)1273 480 661
Email sales@rfsolutions.co.uk
http://www.rfsolutions.co.uk

R F Solutions is a member of the Low Power Radio Association.

All Trademarks acknowledged and remain the property of the respected owners.

Information contained in this document is believed to be accurate, however no representation or warranty is given and R.F. Solutions Ltd. assumes no liability with respect to the accuracy of such information. Use of R.F. Solutions as critical components in life support systems is not authorised except with express written approval from R.F.Solutions Ltd.

RFEVAL Evaluation Kit

- Remote Telemetry Evaluation
- AM and FM & IR Technology
- Digital and RS232 Serial Data Outputs
- Hardware Evaluation Platform
- Range Testing
- Target Environment Testing
- Antenna Evaluation
- Uses RF600 Encoder/Decoder (Keeloq)



The RFEVAL2 / 3 are hardware development platforms designed to assist the engineer with the design of a remote telemetry application. This kit provides several projects. Each project utilises an 'off the shelf' transmitter encoder incorporating the RF600E. The RFEVAL receiver board use s the RF600D to perform RF / IR reception and decoding providing a variety of outputs.

Our aim with this Evaluation kit is to assist the engineer in achieving a remote telemetry application with;

1. Optimum Range (we expect you to achieve)
    a. AM project upto 80m
    b. FM project upto 150m
2. Design of simple integrated receiver decoder
3. Minimal hardware costs for the receiver decoder

RF EVAL2 Contents List:

Item	Part No	Description	Qty
1	AM-110C3-433	pocket keyfob transmitter433MHz, 3 Switch	1
2	102C4-433F	Transmitter/Encoder 433.92MHz, Hand Held, 4 Switch	1
3	SA123	RFEVAL2 Receiver Decoder Assembly	1
4	AM-HRR3-433	Receiver 'Hybrid' Module AM 433MHz, SIL	1
5	AM-RRS3-433	Receiver 'Hybrid' Module Super Het, AM 433MHz, SIL	1
6	AM-HiRK-433	Rx/Decoder AM Superhet 433MHz SIL Hybrid5V Keeloq	1
7	FM-RRFQ1-433	FM Receiver 433.92MHz	1
8	FLEXI-M4-433	¼ Wave Antenna	1
9	PHC-M4-433	Helical Antenna	1
10	BATT-PP3	PP3 Battery	1

All components required to complete the following projects are supplied.

Project	Transmitter	Receiver	Outputs	Range
1	110C1-433A	AM-HiRKB-433	Digital	100m
2	110C2-433A	AM-HRR3-433	Digital & RS232	40m
2	110C3-433A	AM-RRS3-433	Digital & RS232	100m
4	102C4-433F	FM-RRFQ1-433	Digital & RS232	150m

RFEVAL3 consists a Receiver decoder board only with the RF600D, this requires the relevant RF Receiver module and antenna to generate a complete receiver Decoder (this is an RF600D design)

Contents List:

Item	Part No	Description	Qty
1	SA123	Telemetry Receiver Decoder Board	1
2	BATT-PP3	PP3 Battery	1

©2004 Reg. No. 227 4001, ENGLAND

Description

The RFEVAL2 kit uses the RF600 chip set to implement the highly secure KeeLoq protocol and allows the user to experiment with this code hopping system. The kit is supplied primarily as a hardware development platform which obviates the need to construct hand-wired prototype boards which are rarely successful in creating a valid environment for the development of radio systems. The following projects can be undertaken with the kit and will allow the user to compare the performance of various transmitter/receiver combinations.

1. Three button AM fob / HiRK-433 receiver decoder module.
2. Three button AM fob / AM-RRS3-433 receiver, RF600D decoder. Serial and parallel outputs.
3. Four button FM encoder with / FM-RTFQ1-433 / RF600D decoder. Serial and parallel outputs.

The RFEVAL2 evaluation board contains seven main areas of circuitry. The board allows the user to connect one of 3 AM/FM receiver modules, or an IR receiver device, to an RF600D decoder subsystem. The output of the subsystem is connected to 5 LED's which are used to display the data outputs of the radio or IR transmitter encoder (which is used to actuate the system). A serial output at RS232 levels is also generated. It is also possible to experiment with an HiRK radio receiver/decoder module and this has its own set of LED's to show the status of its outputs. A number of points on the circuit are brought out to test points to allow access to signals to assist in an understanding of how the various parts of the evaluation board function.

The following shows the principal components in each of the circuit areas will serve to assist in understanding the potential of the evaluation board as a development tool.

RF input area consisting of one of four receiver modules.

FM	RRFQ1.	(M3)
AM	HRR3 / RRS3	(M4)

RF600 decoder subsystem.

RF600D decoder chip.	(U1)
EEPROM memory 96C76.	(U2)
Learn switch.	(SW1)
Learn LED.	(LED1)

Alternately the RF600D8 decoder can be fitted in place of the RF600D device. This decoder outputs a serial data stream for any KeeLoq decoder from which it receives data without the requirement to first learn the identity of the encoder.

Digital output area.

RF600D output data LED's:	(LED2 – LED5)
RF600D low battery LED:	(LED6)

Infra Red input.

Opto Schmitt detector/demodulator IS436.	(U3)

Serial data output area.

MAX232A TTL – RS232 level converter. (U4)
9 way 'D' connector. (J1)

©2004 Reg. No. 227 4001, ENGLAND

HiRK decoder area.

AM-HiRK-433 receiver/decoder module. (M5)	
Learn switch.	(SW2)
Learn LED.	(LED7)
Data LED's.	(LED8, 9, 10)

Power supply area.

5 volt regulator. (U5)	
Supply indicator	(LED11)

The radio keyfob is a standard R. F. Solutions AM-110C3-433 keyfob which contains an RF600E encoder chip and also an AM radio transmitter circuit. Three push buttons allow the user to send commands to the RFEVAL2 board where the signals will be received and decoded.

The RFEVAL2 board is supplied with a circuit diagram and also a parts list and can be used for a wide range of development tasks including the following.

Remote switching - software and hardware systems can be simply prototyped and tested.
Range and environment testing - these initial stages of project design can be carried out and valuable results obtained without the expense of PCB design and procurement.
Solve the great AM/FM question - the low cost of AM modules must be balanced with their lower performance when compared to FM and accurate comparisons of performance can be carried out with this board.
Aerial test - the transmitter board has provision for both AM and FM modules and can be fitted with helical stub and 1/4 wave whip aerials, thus allowing module and aerial performance to be tested and optimised.

RF Input Circuit.
The RF input stage of the RFEVAL2 board can be implemented using either a radio receiver module or alternately using the composite hybrid receiver / decoder HiRK module.

The can accept up to 3 radio modules and each module has an associated pair of option links. One of these couples the +5 volt supply to the module and the other allows for the connection of the 'data out' signal to the decoder IC. The need for a +5 volt option link may not be immediately apparent but most radio receivers are in practice transmitters as well and radiate from their local oscillator stage. If these signals are picked up by a nearby receiver then they may well cause distortion of incoming 'real' signals or in extreme cases my completely prevent operation of the receiver. The four modules which may be fitted to the board are as follows.

FM-RRFQ1 FM module (M3) which receives signals from a compatible FM transmitter module such as the FM-RTFQ1. Operation is possible at data rates up to 4.8Kbps and at distances up to 250 metres over open ground.

AM-HRR3 AM module (M4) which receives signals from a compatible AM transmitter module such as the AM-RT4 or AM-RT5. These modules will operate at up to 4 Kbps and over a range of up to 500 metres. The super-regenerative circuit used, results in a low cost device with adequate performance for many short range applications. Note that this module position will accept RRS3 modules which utilise a superhet circuit to give improved performance and range over the HRR3 devices.

Irrespective of how many modules are fitted, it will be necessary to connect the +5 volt and data lines of one module using the link options filed on the PCB. It is important that only one pair of links be made at any one time to prevent inter-module interference and also to prevent damage to the 'data out' signal pins on the modules. The following table gives the link option fitment for each module.

©2004 Reg. No. 227 4001, ENGLAND

Module	Reference	Links to make
R5.	(M2)	LK3, 4
RRFQ1.	(M3)	LK5, 6
HRR3	(M4)	LK7, 8

RF600 Decoder Circuit.

The RF600 decoder stage of the RFEVAL2 board is implemented using the RF600D chip. This device offers a complete 'system on a chip' solution to radio data reception, Keeloq decoding and non volatile memory handling. Examination of the circuit diagram and layout reveals that U1, the RF600D device, is an 18 pin part which can be either in a DIL or a surface mount package. The associated 4 MHz resonator (X1) provides a timing reference for the RF600D. A 93C76 EEPROM memory provides 512x16 bits of non volatile memory which is used to store data on the encoders (up to 50) which have been 'learned' by the system. Also in this circuit area can be seen a 'learn' switch (SW1) and an LED (LED1) and these parts are used to control and indicate progress of both encoder learning and also data erasure. Option link fields are provided for a number of functions:

OPT1 allows the selection of radio data or IR data.
OPT2 allows the selection of latch or momentary mode for the data outputs.
OPT3 allows the selection of input data sync pulse 'mark'.

Note that where space is tight, a serial only version of the decoder - the RF600E is available in an 8 pin DIL/SO package. This device does not decode the KeeLoq stream but after verifying that the data packet is a true Manchester encoded packet, extracts the encoder serial number and button status and outputs this as serial data. In applications where the high security level of KeeLoq encoding is not required, this device provides a simple solution to the problem of reading and verifying data from the noisy data output of a radio module.

Radio or IR data selection.

The RF600D chip can decode signals from either the radio modules or the IR receiver device and option field OPT1 allows the selection of the desired input.

Input	**Make OPT1 link**
Radio data	RF
IR data	IR

Output function.

The RF600D chip has 4 data outputs and these can operate as either all latched or all momentary.

Output mode	**Make OPT2 link**
Latch all	LATCH
Momentary all	MOM

©2004 Reg. No. 227 4001, ENGLAND

Input data mark.

The data stream received by the RF600D chip may be inverted as it passes through the radio or IR path. When the bit stream is generated by the KeeLoq chip a 4 element sync pattern is inserted to allow the RF600D chip to detect the end of the '01' run-in part of the stream and the start of the data. At the output terminal of the KeeLoq chip this 4 element sync pattern consists of 4 elements of data '0' and if the radio or IR data path does not invert the data then we would see this 4 element pattern in the data stream at the input terminal of the RF600D chip. In this case we would say that the 'mark' of the incoming data is –ve (low). If however the data path inverts the data stream then we would see 4 elements of data '1' and we would say that the data 'mark' is +ve (high).

In order for the RF600D chip to be able to decode the incoming bit stream it has to know the mark of the incoming data and this is set on pin 8 of the device. This pin is normally used as an output to drive the clock line of the EEPROM but when the EEPROM is not selected (CS is held low) then the state of this pin is not recognised by the device. If we now change this pin on the RF600D to an input we can read the logic level of the pin and use this to set the incoming data mark. The mark setting is done on option link OPT3 according to the following table.

Data mark	data type	make link
+ve	FM and IR	+ve / FM
-ve	AM	-ve / AM

Learn and erase.

The learn switch serves to place the RF600D subsystem into either learn mode or erase mode. The learn mode is used to initiate the process whereby the subsystem learns the KeeLoq parameters of a new encoder device and places these into the EEPROM. The erase mode is used to wipe all encoder parameters from the EEPROM.

To actuate the learn mode the LEARN-1 switch should be briefly operated at which point the adjacent LED will light up. A button on the encoder to be learned should now be operated briefly, causing the LED on the evaluation board to extinguish. Now re-operate the same button on the encoder and the LED on the evaluation board will flash on and off for several seconds indicating that the learn process is complete. Up to 50 encoders can be learned by one decoder and if additional attempts are made to learn new encoders then each new learn process will overwrite the oldest learned data block.

Erasure of all learnt data can be carried out by pressing and holding down the LEARN-1 switch for at least 8 seconds. The LED will be on when the button is down and will then flash when the switch is released, indicating that the EEPROM is being erased. When the LED is extinguished, all EEPROM data will have been erased.

Serial data output

As mentioned above, the RF600D subsystem produces a serial data output which can be fed into another microcontroller or RS232 driver. The configuration of this output is fully documented earlier in this datasheet (SA123)

Digital Output Circuit.

The data outputs from the RF600D chip consist of the following signals:

1. Data outputs mirroring the 4 switch inputs on the RF600E chip.
2. The low battery flag from the RF600E chip.

The data outputs from the RF600D are connected to four LED's such that switch inputs S0 – S3 on the encoder have their state mirrored on LED's LED2 – LED5. Thus when encoder input S0 is taken high, LED 2 will come on and the others will remain off. Note that the data outputs are made available on J5.

The low battery output from the RF600D is connected to LED 6 such that if the encoder battery level falls below 3.5 volts (typical) then the LED will come on. This indication is true only for the duration of the transmission. Note that the low battery output is made available on J5.

©2004 Reg. No. 227 4001, ENGLAND

Infra Red Input Circuit.

The Infra Red (IR) input stage consists solely of the IS436 IR detector device. This part is constructed in a 3 pin package with integral lens and acts as a detector and demodulator with Schmitt trigger data slicer. If an IR encoder is activated and pointed at the detector then the output waveform will be of +ve mark and can be coupled to the RF600D subsystem by setting the input selector OPT1, to IR and the mark selector OPT3, to FM.

Serial Data Output Circuit.

The RF600D subsystem produces a serial data output at logic level which can be fed into another microcontroller or alternately it may be desirable to pass the data into a device which will accept RS232 level data. The serial data output circuit area consists of a MAX232A TTL – RS232 level converter (U4) which converts the logic level serial data output from the RF600D into an RS232 level data stream. The data is output on the 9 way 'D' connector (J1) with data on pin 2 and ground reference on pin 5. Note that the DSR line (pin 6 on J1) is held at RS232 high level and may be used to enable the receiving device.

HiRK Decoder Circuit.

The HiRK decoder system offers the designer a 'single component' solution to AM data reception and decoding. In many ways the features and operation of the decoder system are almost identical to those offered by the radio-module-plus-RF600D system described above. Indeed, operation of the learn switch (LEARN-2) and associated LED7 are identical to those of the RF600D subsystem.. The 3 data outputs on the HiRK module are connected to LED 8, 9 and 10 and these show the states of data inputs S0 – S2 on the encoder RF600E chip. For a full description of the function and application of this module please see datasheet DS097.

Power Supply Circuit.

The power supply for the board allows the use of an on-board PP3 battery plugged into connector J10. Alternately an 8 – 12 volt dc power source may be connected to J1 or a standard R. F. Solutions power supply (as used with 'ICEPIC' product) may be plugged into socket J5. Note that only one power source should be connected at any one time.

The dc input supply is regulated by the 78L08, 5 volt regulator (U5) and a power on indicator (LED11) is provided to show the presence of the 5 volt supply.

KeeLoq Parameters.

The RF600D and RF600E devices utilise The Microchip KeeLoq coding system to guarantee secure transfer of the data between the encoder and the decoder. The coding parameters which are applied to the KeeLoq structure is as follows:

Modulation format:	Manchester coded
Baud rate:	400 us, short time out
Manufacturers code:	R. F. Solutions.
Long Guard Time:	Disabled.
Auto Shut Off Timer:	Disabled.

©2004 Reg. No. 227 4001, ENGLAND

Typical Application

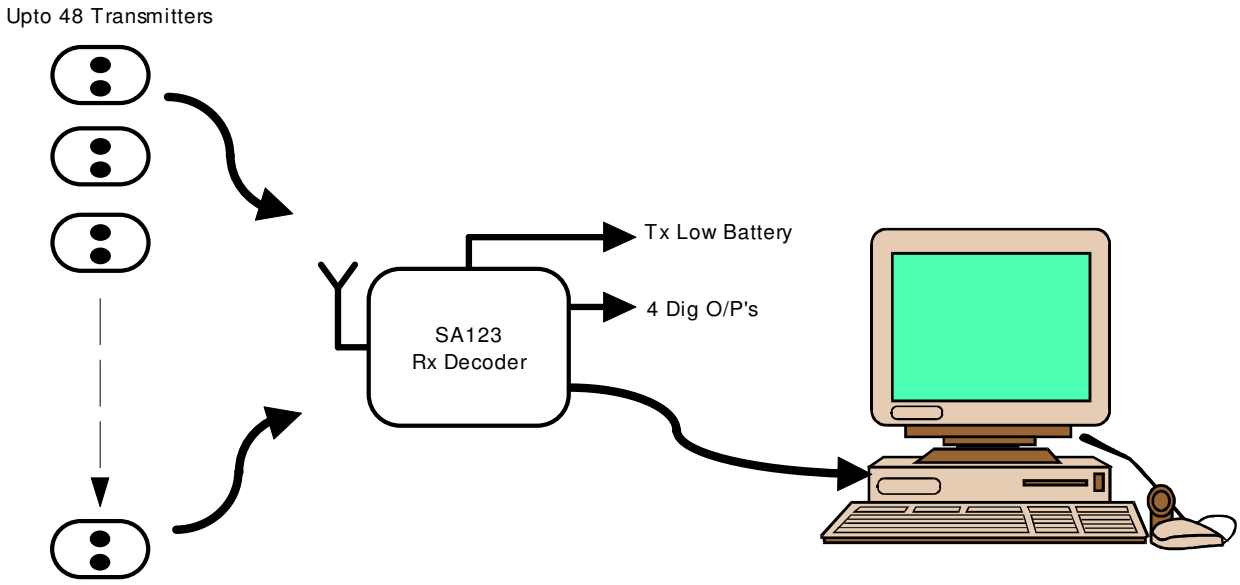

Configuring the outputs to operate with Transmitter Encoders

The principle of operation is as previously described in the operation of the RF600D.

Note that the on board RF600D will only operate the digital outputs of 'pre-learnt' transmitter encoders. Upto 48 unique transmitters may be learnt. The Serial output will be valid whenever a transmitter encoder is operated within range of the RF / IR receiver as long as the transmitter encoder has a matching Manufacturers Key. (For a unique manufacturers key please contact our sales Department) No 'pre-learning' of the transmitter encoder is required for the serial data output.

Therefore if a serial output is required from a pre-learnt transmitter encoder the digital and serial outputs must be logically gated together (using a simple logic gate).

Using HyperTerminal to view the Serial Data

The data can be viewed using any PC running Windows HyperTerminal using the following configuration. (Assume Com 1 is the port being used:)

To start HyperTerminal go to :-

Start > Programs > Accessories > Communications > HyperTerminal.

Select ***Hypertrm.exe***

Enter a name and select an Icon.

The '**Connect To**' dialog box should now be open.

Select ***"Direct to COM1"*** in the 'Connect Using' Field and select OK.

In the COM1 Properties Dialog Box set the fields with the following parameters:

Bits per Second:	***9600***
Data Bits:	***8***
Parity:	***None***
Stop bits:	***1***
Flow control:	***None***

©2004 Reg. No. 227 4001, ENGLAND

Select OK.

HyperTerminal is now configured correctly for use with the RF600E/RF600D chip set.

Application Example : Leisure Centre Access Control

A Leisure Centre uses an electric gate access control to its members. Each Leisure Centre Member is provided with a keyfob and when entering the centre, uses the keyfob to open the gate.

The SA123 is contained within the gatehouse and provides the serial data output of each keyfob accessing the system. This data is used by the Leisure centre to provide information as to which member is entering the centre and at what time of day.

Technical Specifications

Dimensions 174 x 106mm

Electrical Characteristics	Min	Typical	Max	Units
Supply Voltage	11.0	12.0	16	V
Supply Current		25		mA
Time from Encoder Switch depressed to Decoder output			100	mSecs
Time from Encoder Switch release to Decoder output			300	mSecs

Ordering Information

Part Number	Description
RFEVAL2-315R1	Evaluation Kit including all components to operate 315MHz
RFEVAL2-433R2	Evaluation Kit including all components to operate 433MHz
RFEVAL3-R1	Evaluation Kit PCB Assemvbly only (includes all circuitry except RF Modules, antenna)
PSU12V1AIN	Power Supply Unit 110-240Vac input, 12V 1A output

** Range stated is optimum, direct line of sight. In worst conditions this can be reduced by over 50%

©2004 Reg. No. 227 4001, ENGLAND