

Eccentric latch | 99

Can be produced in steel. Can be complement with catchplate 904201. 901585 is delivered with catchplate.

Art.no.	Material	Treatment	Weight	Note
901580	Stainless steel (AISI304)	Electro polished	32 g	
901585	Brass	Polished	36 g	Catchplate included

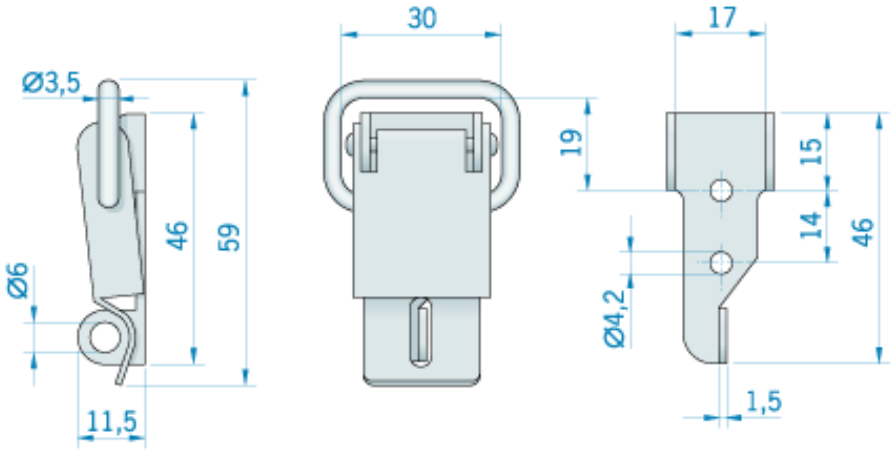

Related products

