SCHAEFFLER

# Deep groove ball bearings 16005 (Series 160)

## main dimensions to DIN 625-1

The datasheet is only an overview of dimensions and basic load ratings of the selected product. Please always observe all the guidelines in these overview pages. Further information is given on many products under the menu item "Description". You can also order comprehensive information via the Catalogue selection system (https://www.schaeffler.de/content.schaeffler.de/en/news_media/index.jsp) or by telephone on +49 (91 32) 82 - 28 97.

| | | | |
|---|---|---|---|
| d | 25 | mm | |
| D | 47 | mm | |
| B | 8 | mm | |
| | | | |
| $D_1$ | 40,4 | mm | |
| $d_1$ | 32,5 | mm | |
| $D_{a\ max}$ | 45 | mm | |
| $d_{a\ min}$ | 27 | mm | |
| $r_{a\ max}$ | 0,3 | mm | |
| $r_{min}$ | 0,3 | mm | |
| | | | |
| m | 0,052 | kg | Mass |
| $C_r$ | 7700 | N | Basic dynamic load rating, radial |

| | | |
|---|---|---|
| $C_{0r}$ | 4650 N | Basic static load rating, radial |
| $C_{ur}$ | 241 N | Fatigue limit load, radial |
| $n_G$ | 22900 1/min | Limiting speed |
| $n_{\vartheta r}$ | 12000 1/min | Reference speed |
| $f_0$ | 15,5 | Calculation factor |

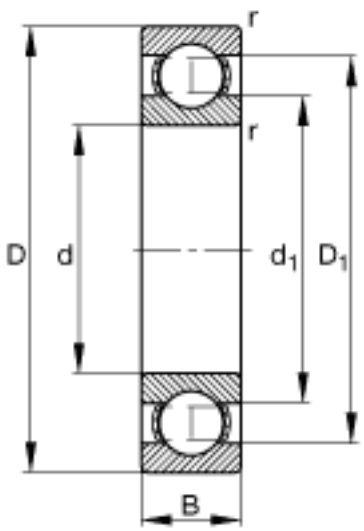

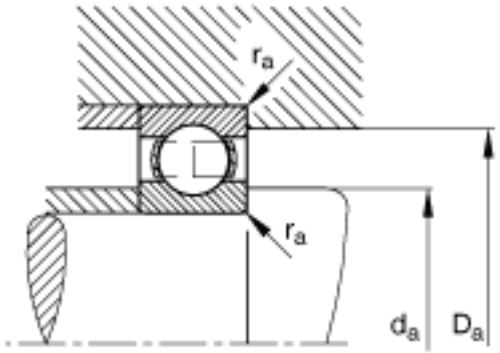
$r_a$
$r_a$
$d_a$
$D_a$