StarTech.com

Hard-to-find made easy®

Single Desk-Mount Monitor Arm | Full Motion Articulating with 2x USB 3.0 Ports



Actual product may vary from photos

User Manual

SKU#: ARMPIVOT2USB3

For the latest information and specifications visit
www.startech.com/ARMPIVOT2USB3

Manual Revision: 01/27/2020

Compliance Statements

Use of Trademarks, Registered Trademarks, and other Protected Names and Symbols

This manual may make reference to trademarks, registered trademarks, and other protected names and/or symbols of third-party companies not related in any way to StarTech.com. Where they occur these references are for illustrative purposes only and do not represent an endorsement of a product or service by StarTech.com, or an endorsement of the product(s) to which this manual applies by the third-party company in question. Regardless of any direct acknowledgement elsewhere in the body of this document, StarTech.com hereby acknowledges that all trademarks, registered trademarks, service marks, and other protected names and/or symbols contained in this manual and related documents are the property of their respective holders.

Warning Statements

- Make sure that you assemble this product according to the instructions.
- Do not exceed the weight capacity of this product. Overloading this product might result in injury or property damage. This product can support the following weight: 17.6 lb. (8 kg).
- This product is intended for indoor use only and should not be used outdoors.

Varningsmeddelanden

- Se till att du monterar produkten i enlighet med instruktionerna.
- Överskrid inte produktens viktkapacitet. Överbelastning av produkten kan orsaka skada på person eller egendom. Denna produkt har stöd för följande vikter: 8 kg.
- Produkten är endast avsedd för användning inomhus och ska inte användas utomhus.

Avertissements

- Assemblez ce produit conformément aux instructions.
- Ne dépassez pas la capacité pondérale du produit. Une surcharge du produit peut entraîner des blessures ou des dommages matériels. Ce produit peut supporter 8 kg.
- Ce produit est uniquement destiné à une utilisation en intérieur et ne doit pas être utilisé à l'extérieur.

Warnhinweise

- Beachten Sie bei der Montage dieses Produkts die Montageanweisungen.
- Überschreiten Sie nicht die Tragkraft dieses Produkts. Ein Überladen dieses Produkts kann zu Verletzungen oder zur Beschädigung des Produkts führen. Dieses Produkt ist für folgendes Gewicht geeignet: 8 kg.
- Dieses Produkt ist nur zum Gebrauch in Innenräumen vorgesehen und sollte nicht im Freien verwendet werden.

Dichiarazioni di avvertenza

- Assicurarsi di Assemblare il prodotto secondo le istruzioni.
- Non superare la capacità di carico del prodotto. Il sovraccarico del prodotto potrebbe causare danni o lesioni. Il prodotto è in grado di supportare i seguenti pesi: 8 kg.

- Il prodotto è destinato all'uso in ambienti interni. Se ne sconsiglia l'impiego in ambienti esterni.

Mensagens de aviso

- Certifique-se de que monta este produto de acordo com as instruções.
- Não exceda a capacidade de peso deste produto. Sobrecarregar este produto pode resultar em ferimentos ou danos de propriedade. Este produto pode suportar o seguinte peso: 8 kg.
- Este produto destina-se apenas a uma utilização no interior e não deve ser utilizado no exterior.
- Este produto requer uma ligação à terra. Não utilize este produto sem uma ligação à terra.

Advertencias de uso

- Asegúrese de ensamblar este producto según las instrucciones.
- Asegúrese de no exceder la capacidad de peso de este producto. La sobrecarga de este producto puede causar lesiones personales o daños en la propiedad. Este producto tiene capicidad para el siguiente peso: 8 kg.
- El uso de este producto es solo para interiores y no debe utilizarse en exteriores.

Waarschuwingen

- Zorg dat u dit product volgens de instructies in elkaar zet.
- Overschrijd de maximale capaciteit van dit product niet. Overbelasting van dit product kan letsel of materiële schade veroorzaken. Dit product ondersteunt het volgende gewicht: 8 kg.
- Dit product is alleen bedoeld voor binnengebruik en mag niet buiten worden gebruikt.

注意

- 必ず取扱説明書に従って本製品の組み立てを行って下さい。
- 本製品で定められた最大積載重量を超えないようにして下さい。最大積載重量をオーバーした場合、怪我をする恐れや器物破損の恐れがあります。本製品は、モニター1台あたり8kgまで支持できます。
- 本製品は、室内での使用を想定しています。戸外では使用しないで下さい。

Safety Statements

Safety Measures

- Cables (including power and charging cables) should be placed and routed to avoid creating electric, tripping or safety hazards.

Mesures de sécurité

- Les câbles (y compris les câbles d'alimentation et de chargement) doivent être placés et acheminés de façon à éviter tout risque électrique, de chute ou de sécurité

安全対策

- ケーブル（電源ケーブルと充電ケーブルを含む）は、適切な配置と引き回しを行い、電気障害やつまづきの危険性など、安全上のリスクを回避するようにしてください。

Misure di sicurezza

- I cavi (inclusi i cavi di alimentazione e di ricarica) devono essere posizionati e stesi in modo da evitare pericoli di inciampo, rischi di scosse elettriche o pericoli per la sicurezza.

Säkerhetsåtgärder

- Kablar (inklusive elkablar och laddningskablar) ska dras och placeras på så sätt att risk för snubblingsolyckor och andra olyckor kan undvikas.

StarTech.com
Hard-to-find made easy®

Table of Contents

Compliance Statements 1

Warning Statements 2

Safety Statements 4

Product Diagram 6

- Product Dimensions 7
- Product Rotation 8

Product Information 9

- Pack Contents 9
- Product Specifications 13
- Requirements 15

Assembling the Monitor Mount Using the C-Clamp 16

Assembling the Monitor Mount Using the Grommet Clamp 24

Mounting the Monitor 33

Adjusting the Monitor Mount 36

- Adjusting the Spring Arm Tension 36
- Adjusting the Tilt 37

Routing the Cables 39

Using the 3.0 USB Passthough Ports 41

Product Diagram

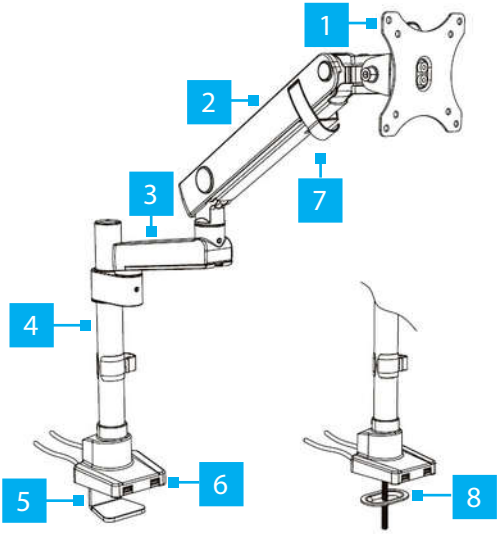

1	*VESA Mount*	5	*C-Clamp*
2	*Upper Arm*	6	*USB Ports*
3	*Lower Arm*	7	*Cable Clip*
4	*Pole*	8	*Grommet Clamp*

Product Dimensions

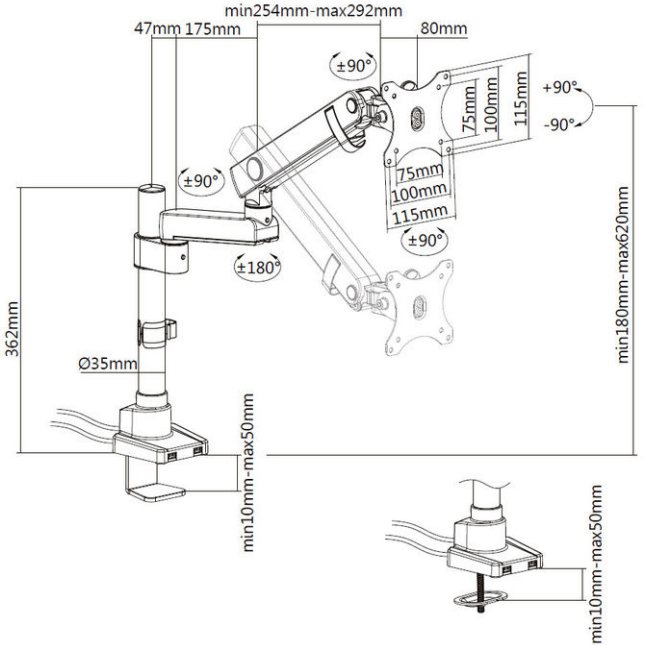

Product Rotation

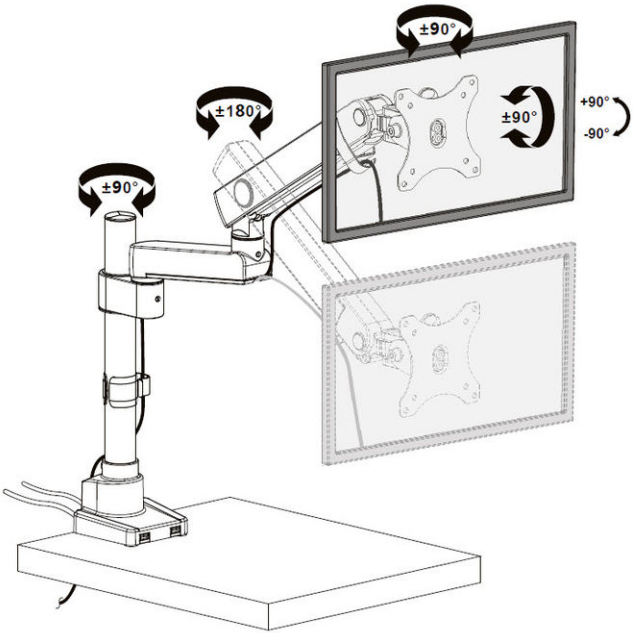

Product Information

Pack Contents

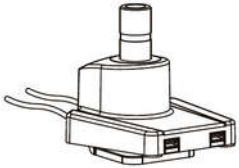 *Base Clamp Assembly* *Qty: 1*	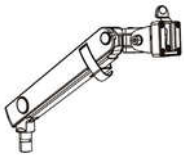 *Upper Arm* *Qty: 1*
 *Lower Arm* *Qty: 1*	 *VESA Mount* *Qty: 1*

 ***Tool Clip*** ***Qty: 1***	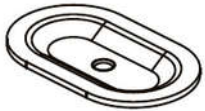 ***Grommet Plate*** ***Qty: 1***
 ***Grommet Screw*** ***Qty: 1***	 ***3 mm Hex Key*** ***Qty: 1***

 ***6 mm Hex Key*** ***Qty: 1***	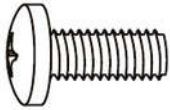 ***M4 x 12 mm Screws*** ***Qty: 4***
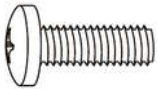 ***M5 x 12 mm Screws*** ***Qty: 4***	 ***Washers*** ***Qty: 4***

 ***Arm Shoulder*** ***Qty: 1***	 ***Cable Clip*** ***Qty: 1***
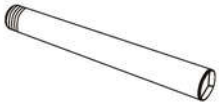 ***Pole*** ***Qty: 1***	

Product Specifications

 *VESA*	*75 x 75* *100 x 100*
 *Rotation*	*- 90⁰ to + 90⁰*
 *Tilt*	*- 90⁰ to + 90⁰*
 *Weight*	*17.6 lb. (8 kg)*

 *Screen Size*	*15″ to 34″*
 *Swivel*	*-90⁰ to +90⁰*

Requirements

Tools

- Phillips Head Screwdriver x 1

Displays

- 15" to 34" Display x 1

Optional

- USB Cables x 2
- USB Compatible Devices x 2

Assembling the Monitor Mount Using the C-Clamp

1. Using the **6 mm Hex Key** loosen the **C-Clamp Screw,** opening the **C-Clamp** to the thickness of the **Mounting Surface** you wish to mount the **Monitor Mount** to. The **C-Clamp Screw** is located in the center of the **Mounting Peg** on the **Base Clamp Assembly**.

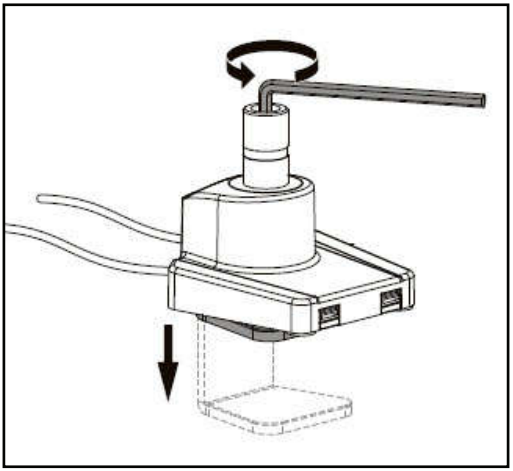

Loosening the C-Clamp Screw

2. Align the **C-Clamp** with the edge of the **Mounting Surface**.

3. Gently push the **USB Cables** coming out of the back of the **Base Clamp Assembly** into the two **Cable Grooves** on the back of the **Base Clamp Assembly**.

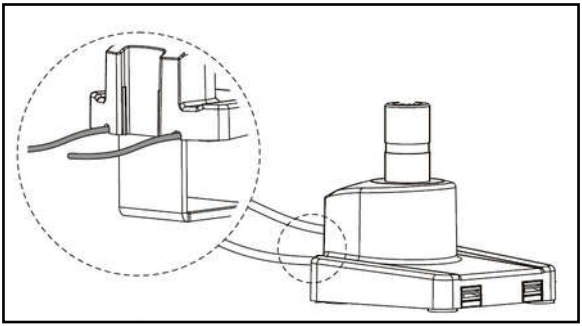

Routing the USB Cables Through the Cable Grooves

4. Slide the **C-Clamp** over the edge of the **Mounting Surface**. The **C-Clamp** accommodates ranges from 10 mm (.3") to 50 mm (1.9").

5. While supporting the **C-Clamp** under the **Mounting Surface**, use the **6 mm Hex Key** to tighten the **C-Clamp Screw** until the **C-Clamp Plate** is pressed tightly against the bottom of the **Mounting Surface**.

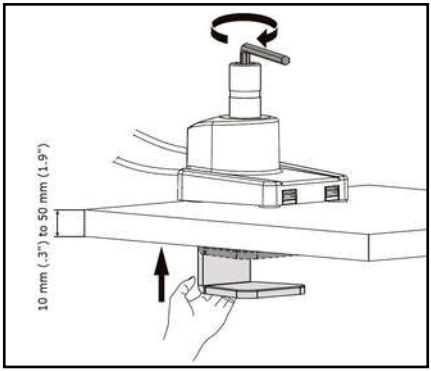

Tightening the C-Clamp Screw

6. Align the **Pole** with the **Mounting Hole** on the **Base Clamp Assembly**.
7. Using your hand, screw the **Pole** into the **Base Clamp Assembly**.
8. Using the **3 mm Hex Key**, tighten the small screw located on the **Neck** of the **Mounting Hole** on the **Base Clamp Assembly** to secure the **Pole**.

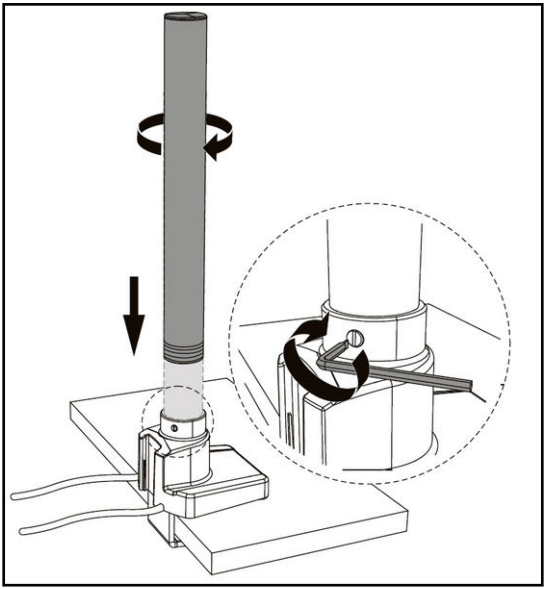

Mounting the Pole to the Base Clamp Assembly

9. Slide the **Cable Clip** over-top of the **Pole**, sliding it down into position.

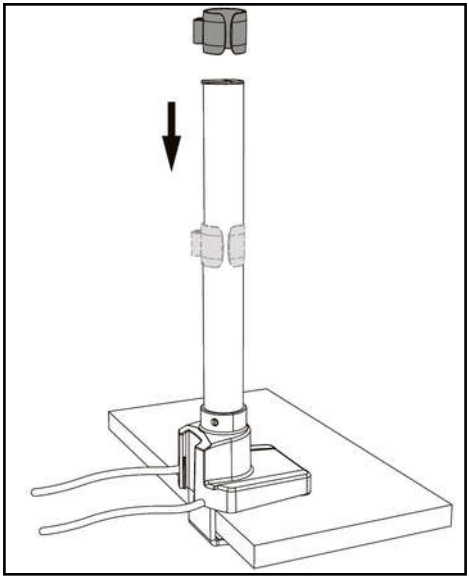

Sliding the Cable Clip over-top of the Pole

10. Slide the **Arm Shoulder** over-top of the **Pole**, sliding it down into position.

11. Turn the **Locking Lever** on the **Arm Shoulder** clock-wise, securing the **Arm Shoulder** into place.

    Note: *The* **Locking Lever** *may require multiple turns in order to properly secure the* **Arm Shoulder** *in place.*

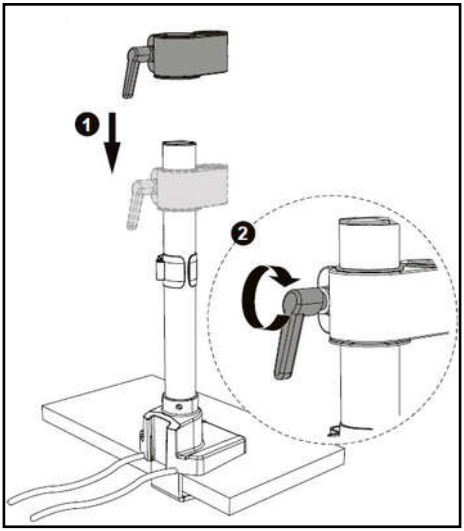

Installing the Arm Shoulder

12. Align the **Mounting Peg** on the bottom of the **Lower Arm** with the **Mounting Hole** on the **Arm Shoulder**.
13. Slide the **Mounting Peg** on the **Lower Arm** into the **Mounting Hole** on the **Arm Shoulder**.
14. Using the **3 mm Hex Key**, tighten the small screw located on the **Arm Shoulder** to secure the **Lower Arm**.

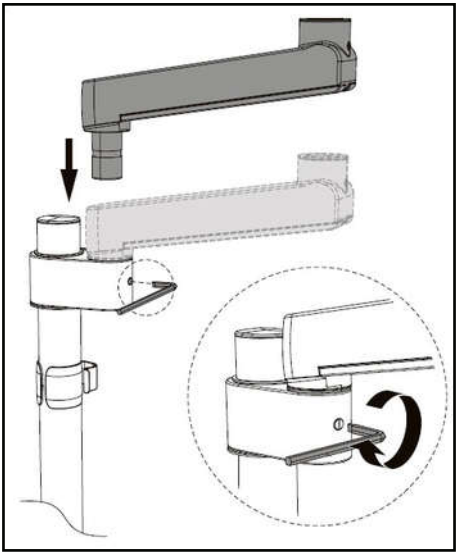

Installing the Lower Arm

15. Align the **Mounting Peg** on the bottom of the **Upper Arm** with the **Mounting Hole** on the top of the **Lower Arm**.

16. Slide the **Mounting Peg** on the **Upper Arm** into the **Mounting Hole** on the **Lower Arm**.

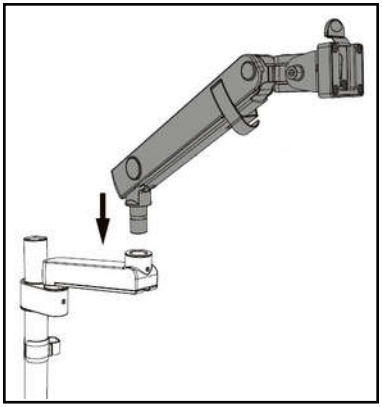

Mounting the Upper Arm to the Lower Arm

17. Using the **3 mm Hex Key** to tighten the **Screw** on the **Lower Arm** securing it to the **Upper Arm**.

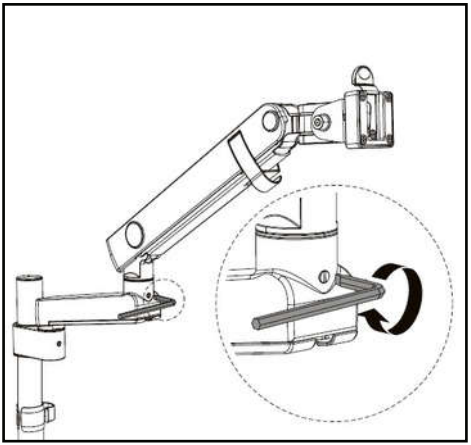

Tightening the Screw on the Lower Arm

Assembling the Monitor Mount Using the Grommet Clamp

1. While holding the **C-Clamp**, use the **6 mm Hex Key** to loosen the **C-Clamp Screw** and remove it from the **Base Clamp Assembly.** The **C-Clamp Screw** is located in the center of the **Mounting Peg** on the **Base Clamp Assembly**.
2. Once the **C-Clamp Screw** is removed the **C-Clamp** will also detach from the **Base Clamp Assembly**.

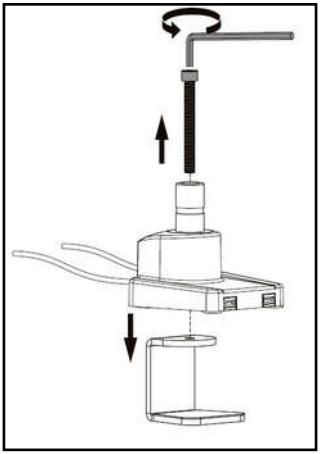

Removing C-Clamp Screw and C-Clamp

3. Align the **Grommet Hole** on the **Base Clamp Assembly** with the **Grommet Hole** on the **Mounting Surface**.

4. Insert the **Grommet Screw** through the center of the **Mounting Peg** on the **Base Clamp Assembly** and out the **Grommet Hole** on the **Mounting Surface**.

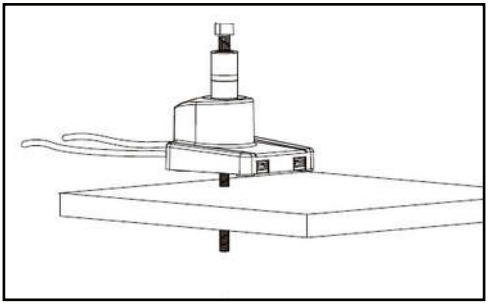

Inserting the Grommet Screw

5. Underneath the **Mounting Surface,** thread the **Grommet Hole** on the **Grommet Plate** onto the **Grommet Screw**.

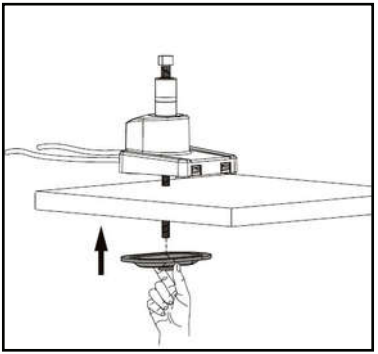

Aligning the Grommet Plate

6. While holding the **Grommet Plate**, use the **6 mm Hex Key**, tighten the **Grommet Screw**, securing the **Base Clamp Assembly** to the **Mounting Surface**.

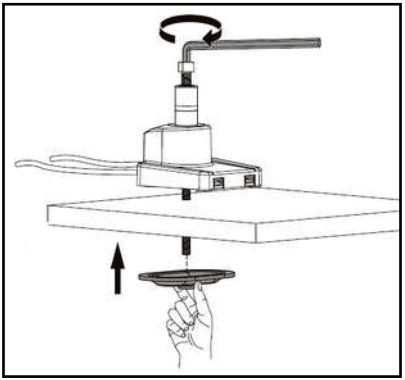

Tightening the Grommet Screw

7. Align the **Pole** with the **Mounting Hole** on the **Base Clamp Assembly**.
8. Using your hand screw the **Pole** into the **Base Clamp Assembly**.
9. Using the **3 mm Hex Key**, tighten the small screw located on the **Neck** of the **Mounting Hole** on the **Base Clamp Assembly** to secure the **Pole**.

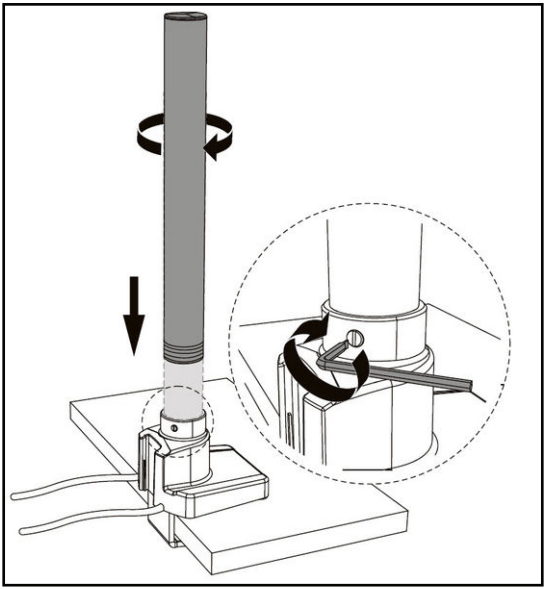

Mounting the Pole to the Base Clamp Assembly

10. Slide the **Cable Clip** over-top of the **Pole**, sliding it down into position.

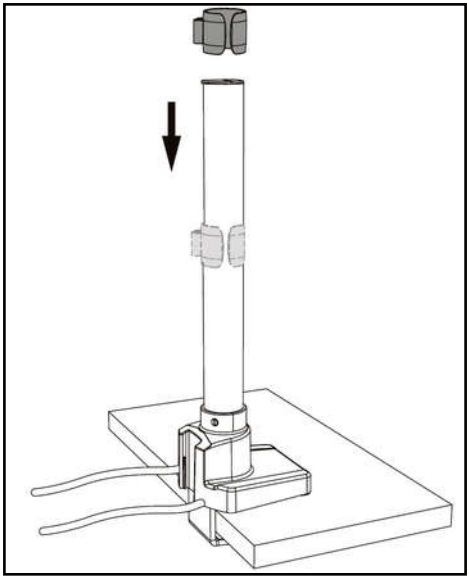

Sliding the Cable Clip over-top of the Pole

11. Slide the **Arm Shoulder** over-top of the **Pole**, sliding it down into position.

12. Turn the **Locking Lever** on the **Arm Shoulder** clock-wise, securing the **Arm Shoulder** into place.

    Note: *The* **Locking Lever** *may require multiple turns in order to properly secure the* **Arm Shoulder** *in place.*

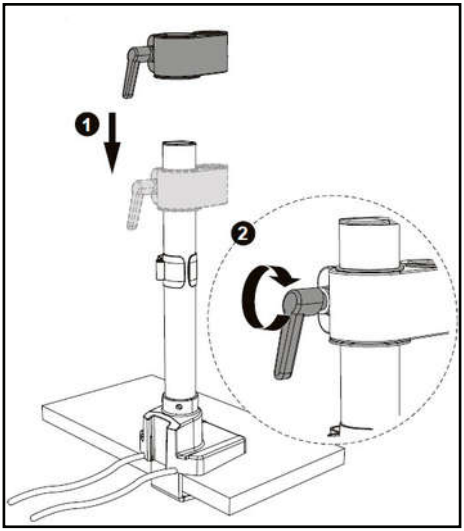

Installing the Arm Shoulder

13. Align the **Mounting Peg** on the bottom of the **Lower Arm** with the **Mounting Hole** on the **Arm Shoulder**.

14. Slide the **Mounting Peg** on the **Lower Arm** into the **Mounting Hole** on the **Arm Shoulder**.

15. Using the **3 mm Hex Key**, tighten the small screw located on the **Arm Shoulder** to secure the **Lower Arm**.

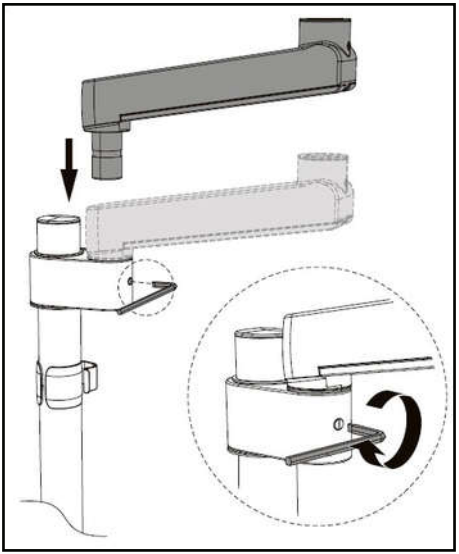

Installing the Lower Arm

16. Align the **Mounting Peg** on the bottom of the **Upper Arm** with the **Mounting Hole** on the top of the **Lower Arm**.

17. Slide the **Mounting Peg** on the **Upper Arm** into the **Mounting Hole** on the **Lower Arm**.

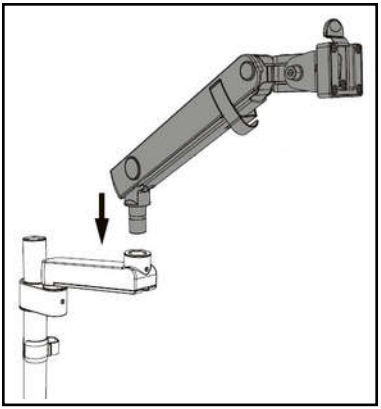

Mounting the Upper Arm to the Lower Arm

18. Using the **3 mm Hex Key,** tighten the **Screw** on the **Lower Arm** securing it to the **Upper Arm**.

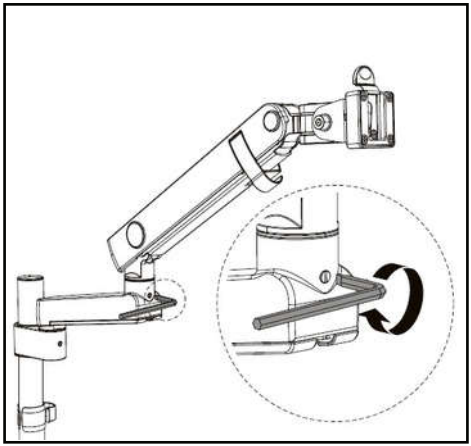

Tightening the Screw on the Lower Arm

Mounting the Monitor

1. Place the **Monitor** screen side down on a flat, clean surface.
2. (Optional) Remove any **Screws** or **Place Holders** from the **VESA Mounting Holes** on the back of the **Monitor**.

   Note: *Be careful not to remove any of the* **Screws** *holding the* **Monitor's Casing** *together.*
3. Align the **Washers** (included) with the **VESA Mounting Holes** on the back of the **Monitor**.

4. Align the **Screw Holes** on the **VESA Mount** with the **VESA Mounting Holes** on the back of the **Monitor**. The **VESA Mount** can support a 75 x 75 or 100 x 100 mounting pattern.

   ***Note** When attached, the* **Arrow** *on the* **VESA Mount** *should be pointing toward the top of the* **Monitor**.

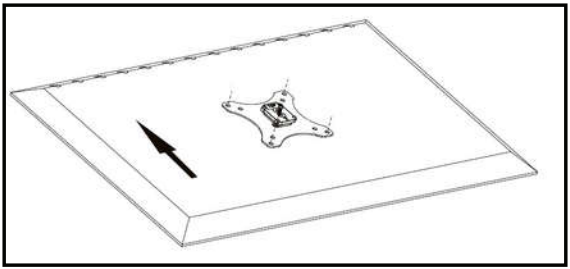

Aligning the VESA Mount with Monitor

5. Select the appropriate hardware for mounting the **VESA Mount** to the back of the **Monitor** either **M4 x 12 mm**, **M5 x 12 mm**, or customer sourced screws.
6. Insert the appropriate **Screws** through the **Screw Holes** on the **VESA Mount** and into the **VESA Mounting Holes** on the back of the **Monitor**.
7. Using a **Phillips Head Screwdriver** (or appropriate screwdriver) tighten the screws.

   ***Note:** Do not over-tighten the* **Screws**. *If you encounter resistance while you're tightening the* **Screws**, *stop tightening. Failure to do so could result in damage to the* **Monitor**.

Note: *It is recommended that two people mount the* **Monitors***.*

8. Pull the **VESA Clip** on the **VESA Holder** back towards the **Spring Arm**.

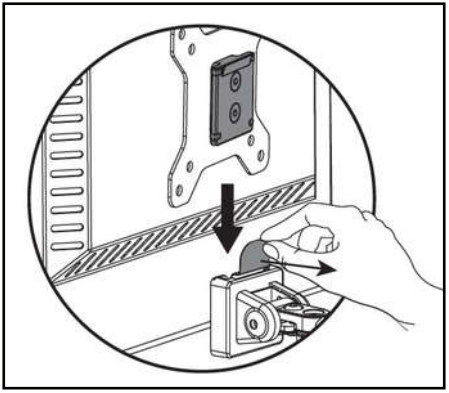

Pulling back the VESA Clip

Note: *The* **VESA Clip** *on the* **VESA Holder** *should be at the top of the* **VESA Holder** *before mounting the* **Monitor***.*

9. While holding the **VESA Clip** and supporting the weight of the **Monitor**, align the **Mounting Plate** of the **VESA Mount** with the **VESA Holder** on the **Spring Arm**.

10. Slide the **Mounting Plate** on the **VESA Mount** down into the **VESA Holder** until the **Mounting Plate** is sitting on the bottom of the **VESA Holder.**

11. While holding the **Monitor** in place, release the **VESA Clip**, securing the **Monitor** in place.

Adjusting the Monitor Mount

Adjusting the Spring Arm Tension

1. Using your hand push downward on the **Spring Arm** and hold it in place.
2. The **Spring Arm** should only be placed in a horizontal position or tilted downwards.

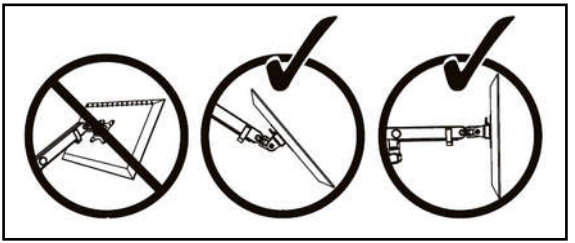

Correct Spring Arm Position

3. Use the **6 mm Hex Key** to rotate the **Adjustment Screw** located at the back of the **Spring Arm,** just above the joint. Rotate clockwise to increase tension or counter clockwise to decrease tension.

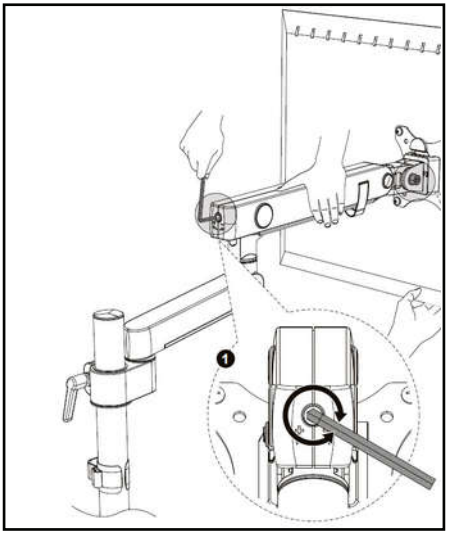

Adjusting the Spring Arm Tension

Note: *Be careful not to pinch your hand when making adjustments to the* **Monitor**.

Adjusting the Tilt

1. Use the **6 mm Hex Key** to loosen the **Tilt Adjustment Screw** located at the side of the **VESA Holder**.

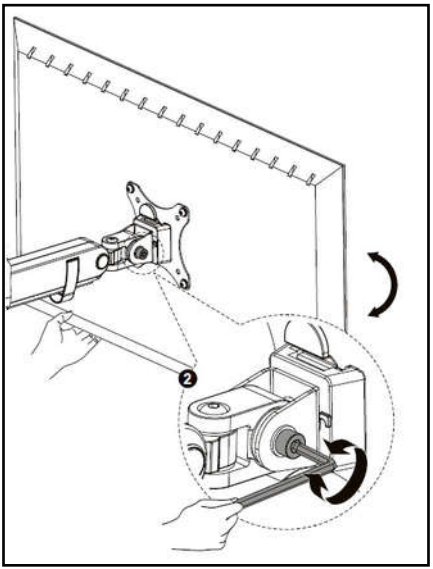

Loosening the Tilt Adjustment Screw

2. Use your hand to adjust the tilt of the **Monitor**.

   Note: *Be careful not to pinch your hand when making adjustments to the* **Monitor**.

3. When you have achieved the desired tilt, hold the **Monitor** in that position and tighten the **Tilt Adjustment Screw**.

Routing the Cables

1. Slide the **Cable Cover** on the **Lower Arm** upward to remove the **Cable Cover**. The **Cable Cover** is located along the bottom of the **Lower Arm**.

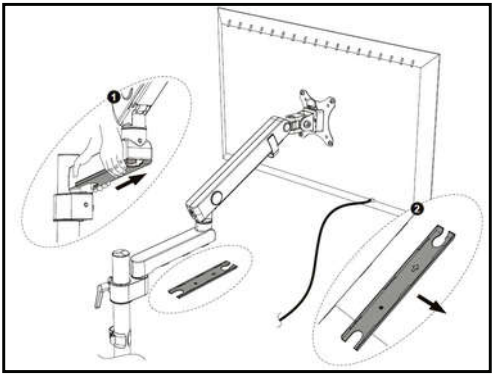

Removing the Cable Cover

2. Run the **Monitor Cables** along the inside of the **Upper Arm**.
3. Gently push the **Monitor Cables** into the **Cable Clip** located on the inside of the **Upper Arm**.

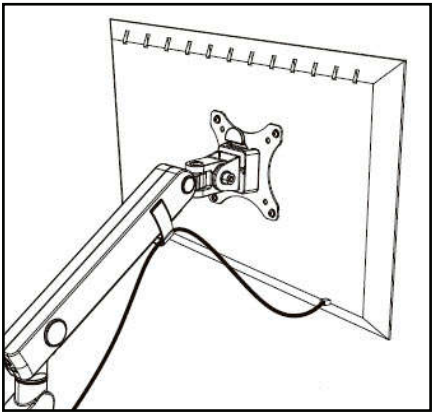

Routing the Monitor Cables Along the Upper Arm

4. Route the **Monitor Cables** down the **Lower Arm** and through the **Tool Clip** on the back of the **Base Clamp Assembly**. Make sure that you leave enough slack in the **Monitor Cable** to compensate for arm movement and adjustments.
5. Replace the **Cable Cover** removed in step 1 by sliding it down the **Lower Arm**, securing the **Cable Cover** to the **Lower Arm**. Be careful not to pinch the **Monitor Cable** between the **Cable Cover** and **Lower Arm**.
6. Run the **Monitor Cable** down the **Pole** and through the **Cable Clip**.

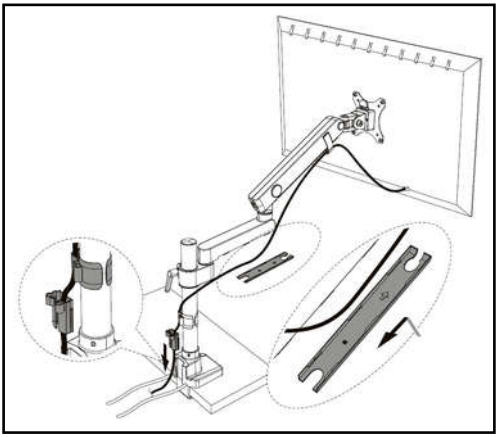

Routing the Monitor Cables

Using the 3.0 USB Passthough Ports

1. Plug the two **USB Cables** on the back of the **Base** into **USB Ports** on the **Host Computer**.
2. Connect a **USB Cable** to the **USB Ports** on the front of the **Base** and the other end to a compatible **USB Device**.

Warranty Information

This product is backed by a two-year warranty.

For further information on product warranty terms and conditions, please refer to www.startech.com/warranty.

Limitation of Liability

In no event shall the liability of StarTech.com Ltd. and StarTech.com USA LLP (or their officers, directors, employees or agents) for any damages (whether direct or indirect, special, punitive, incidental, consequential, or otherwise), loss of profits, loss of business, or any pecuniary loss, arising out of or related to the use of the product exceed the actual price paid for the product.

Some states do not allow the exclusion or limitation of incidental or consequential damages. If such laws apply, the limitations or exclusions contained in this statement may not apply to you.

StarTech.com
Hard-to-find made easy®

Hard-to-find made easy. At StarTech.com, that isn't a slogan. It's a promise.

StarTech.com is your one-stop source for every connectivity part you need. From the latest technology to legacy products — and all the parts that bridge the old and new — we can help you find the parts that connect your solutions.

We make it easy to locate the parts, and we quickly deliver them wherever they need to go. Just talk to one of our tech advisors or visit our website. You'll be connected to the products you need in no time.

Visit www.startech.com for complete information on all StarTech.com products and to access exclusive resources and time-saving tools.

StarTech.com is an ISO 9001 Registered manufacturer of connectivity and technology parts. StarTech.com was founded in 1985 and has operations in the United States, Canada, the United Kingdom and Taiwan servicing a worldwide market.

Reviews

Share your experiences using StarTech.com products, including product applications and setup, what you love about the products, and areas for improvement.

StarTech.com Ltd.
45 Artisans Cres.
London, Ontario
N5V 5E9
Canada

StarTech.com LLP
2500 Creekside Pkwy.
Lockbourne, Ohio
43137
U.S.A.

StarTech.com Ltd.
Unit B, Pinnacle
15 Gowerton Rd., Brackmills
Northampton
NN4 7BW
United Kingdom

FR: startech.com/fr
DE: startech.com/de
ES: startech.com/es
NL: startech.com/nl
IT: startech.com/it
JP: startech.com/jp