Data sheet

Grid feeding monitoring according to VDE-AR-N 4105 and BDEW
CM-UFD.M31

The CM-UFD.M31 is a multifunctional grid feeding monitoring relay. It provides different monitoring functions in accordance with VDE-AR-N 4105 and BDEW to detect over- and undervoltage (10-minutes average value, voltage increase and decrease protection) as well as over- and underfrequency (frequency increase and decrease protection).

The device trips the section switch which is connected between the distributed generation and the public grid in order to disconnect the distributed generation, in case of problems (e.g. unstable grid), faults or maintenance on the grid. Additionally, monitoring of ROCOF (rate of change of frequency) and vector shift can be configured.



2CDC 251 001 S0014

Characteristics

- Monitoring of voltage and frequency in single- and three-phase mains (2-wire, 3-wire or 4-wire AC systems)
- Third party certificate confirming accordance with VDE-AR-N 4105 and BDEW
- Over- and undervoltage, 10-minutes average value as well as over- and underfrequency monitoring
- Two-level threshold settings for over-/undervoltage and over-/underfrequency
- ROCOF (rate of change of frequency) monitoring and vector shift detection configurable
- Interrupted neutral detection
- Pre-settings according to VDE-AR-N 4105 and BDEW
- True RMS measuring principle
- All threshold values and tripping delays adjustable
- Error memory for up to 99 entries (incl. cause of error, measured value, relative timestamp)
- Password setting protection
- 3 control inputs, e.g. for feedback signal, remote trip
- 3 c/o (SPDT) contacts
- Multiline, backlit LCD display

Approvals

Third party certificate confirming accordance with VDE-AR-N 4105 and BDEW

Marks

CE CE

Order data

Type	Rated control supply voltage	Measuring range	Order code
CM-UFD.M31	24-240 V AC/DC	L-L: 0-540 V AC / L-N: 0-312 V AC	1SVR 560 730 R3401

Functions

Operating controls

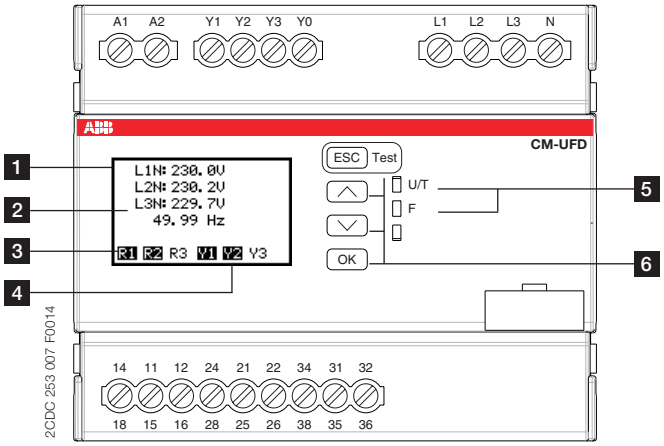

1 **Display**

2 **Measured values**

3 **Status of output relays**
In this case R3 is de-energized

4 **Status of control inputs**
In this case Y3-Y0 is open

5 **Indication of operational states**
U/T: green LED – ⎍‾⎍ Control supply voltage applied
⎍⎍⎽ Timing
F: red LED - Fault message

6 **Operating buttons**

Application

The CM-UFD.M31 is a grid feeding monitoring relay which monitors the voltage and the frequency of the public grid. Whenever the measured values are not within the range of the adjusted threshold values, the CM-UFD.M31 causes tripping of the section switch. This tripping disconnects the power generation such as photovoltaic systems, wind turbines, block-type thermal power stations from the grid. The fault is indicated by LED and the corresponding plain text failure message is shown on the display.

In conformity to VDE-AR-N 4105: 2011-08, the CM-UFD.M31 relay can be used in all low voltage plants and in medium voltage plants. The grid feeding monitoring relay is mandatory in all low voltage generation plants with power > 30 kW.

In applications according to BDEW, the auxiliary voltage supply of the protection equipment must be equipped additionally with a network-independent energy source (e.g. battery, UPS).

Operating mode

The CM-UFD.M31 can be set up to monitor single- and three-phase mains (2-wire, 3-wire as well as 4-wire AC systems). The unit is configurable by front-face push-buttons. A display with the corresponding menu enables the selection of pre-settings as well as the precise adjustment of the different threshold values and corresponding time delays. Furthermore, the display visualizes the measured values clearly. Together with the front-face LEDs, it shows all information about operational states of output relays and control inputs.

The CM-UFD.M31 provides 3 output relays and 3 control inputs. Output relays R1 (11_{15}-12_{16}/14_{18}) and R2 (21_{25}-22_{26}/24_{28}) are required for disconnection of a distributed generation from the public grid. The corresponding feedback signals from the external contacts are monitored via the control inputs Y1-Y0 and Y2-Y0. The third output relay R3 (31_{35}-32_{36}/34_{38}) can be used for the closing command of a motor drive for circuit breaker or as signalization of output relays R1 and R2. The additional control input Y3-Y0 allows to trip the grid feeding monitoring relay from remote (remote trip). With control input Y3-Y0 it is also possible to suppress input Y1-Y0, input Y2-Y0, both together or the vector shift detection.

Protective functions

If control supply voltage is applied, all phases are present and the switch-on conditions for voltages and frequency are fulfilled, output relays R1 and R2 energize synchronously after the adjusted switch-on delay. The green LED U/T flashes while timing and turns steady when the switch-on delay is complete.

If a measured value exceeds or falls below the set threshold value (overvoltage, undervoltage, overfrequency or underfrequency), R1 and R2 de-energize after the adjusted tripping delay. As soon as the measured value returns to the tolerance range - taking into account an adjustable hysteresis – and all further switch-on conditions are fulfilled, R1 and R2 re-energize. The fault is indicated by the red LED F and the type of fault is shown on the display as a plain text message. The event that has caused tripping of the relay is recorded in the event list. The green LED U/T flashes while timing and turns steady when the delay is complete.

Output relay R3 (31_{35}-32_{36}/34_{38})

Output relay R3 can be used for the closing command of a breaker motor. For this function either the “closed-circuit” or the “open-circuit” working principle must be selected. When output relays R1 and R2 energize, the adjusted ON-delay starts. When timing is complete, R3 will be activated for the duration of the ON-time or until R1 and R2 de-energize.

Additionally R3 can be configured as “synchronous with R1/R2” or “disabled”. With these two configurations the settings for the ON-delay and the ON-time have no influence on the operating function.

Control inputs Y1-Y0, Y2-Y0

Both control inputs Y1-Y0 and Y2-Y0 are used as feedback contacts for the 2 switching devices of the section switch. The current status of the switching devices is monitored by the grid feeding monitoring relay. The working principle of the control inputs can be configured as “normally closed”, “normally open”, “auto detection” or completely “disabled”. Please note that “normally” here refers to “good status” of the grid, when all the monitored voltages and the frequency stay within the set threshold values and output relays R1 and R2 are energized. A failure in the feedback loop has to be removed manually on the device.

Control input Y3-Y0

The function of control input Y3-Y0 can be configured as “remote trip”, “suppress Y1”, “suppress Y2”, “suppress Y1/Y2” or “suppress vector shift detection”. Working principle of the control input can be configured as “normally open”, “normally closed” or completely “disabled”.

Remote trip: With Y3-Y0 configured as “normally closed”, output relays R1 and R2 de-energize if Y3-Y0 is opened, and vice versa.

Suppress Y1, suppress Y2, suppress Y1/Y2: These functions can be used to suppress evaluation of the chosen feedback loop during synchronization of a generator, so that the status of the feedback signal will not be considered as a feedback error. An alternative solution is to set the release window of the corresponding feedback loop larger than the possible duration of synchronization process.

ROCOF (Rate of change of frequency df/dt)

This function can be used to detect a possible loss of mains (islanding). If a loss of mains is not detected, the distributed generation remains connected within the islanded network and might become out of synchronism with the public grid. Therefore a later restoration of the grid supply could lead to damage of the distributed generation and other devices within the islanded network.

The monitoring function ROCOF is disabled by default. It can be manually enabled in the menu. The grid feeding monitoring relay detects voltage zero crossings over an adjustable number of cycles in order to calculate the rate of change of frequency. If the ROCOF exceeds the adjusted threshold value e.g. 1 Hz/s, output relays R1 and R2 de-energize after the corresponding tripping delay. Only after the set error time the switch-on conditions will be evaluated in order to start an auto reconnection.

Vector shift detection

This function is another possibility of detecting a loss of mains (islanding).

The vector shift detection is also disabled by default and can be manually enabled in the menu. Through zero crossings the device detects the vector shift of mains voltage and de-energizes output relays R1 and R2 immediately if the shift exceeds the adjusted threshold value, e.g. 10 °. Only after the set error time the switch-on conditions will be evaluated in order to start an auto reconnection.

Switch-on conditions

In order to switch on the section switch after having applied control supply voltage or after a fault, the voltages as well as the frequency must stay within the set tripping thresholds during the switch-on delay. This window of voltage and frequency can be further restricted in the menu “Switch-on conditions”. If one parameter leaves the window, the switch-on process is interrupted. When all parameters fulfill the switch-on conditions again, the switch-on delay restarts. If the function “Short interruption” is enabled in the menu “Switch-on conditions” -> “Switch-on delay”, the switch-on delay will be reduced to 5 s in case of a short interruption of < 3 s.

Interrupted neutral detection

Interrupted neutral detection is always active when one of the phase-neutral measuring principles is selected in the menu “Nominal voltage”. The interruption of the neutral conductor will result in an immediate tripping of the output relays R1 and R2.

Automatic reconnecting attempts

If an error occurs at feedback loop Y1-Y0 or Y2-Y0 (e.g. undervoltage release because of a lightning strike), 0…3 automatic reconnecting attempts will be carried out, taking into account the switch-on conditions. Therefore a temporary feedback error doesn't have to be handled manually. The corresponding error in the feedback loop is stored in the error list.

Test function

The test function can be used to simulate an error in the installation. This way, the time delays of the feedback loops can be determined. A feedback loop includes the output relay, the corresponding switching device and the feedback contact. The test function can be started by pressing the ESC button for 3 seconds. The output relays R1 and R2 de-energize immediately and the CM-UFD.M31 gets feedback signals from the section switch through control inputs Y1-Y0 and Y2-Y0 respectively. The time intervals from de-energizing both output relays to receiving both feedback signals is shown on the display. Return to the menu is realized by confirming with the OK button.

Electrical connection

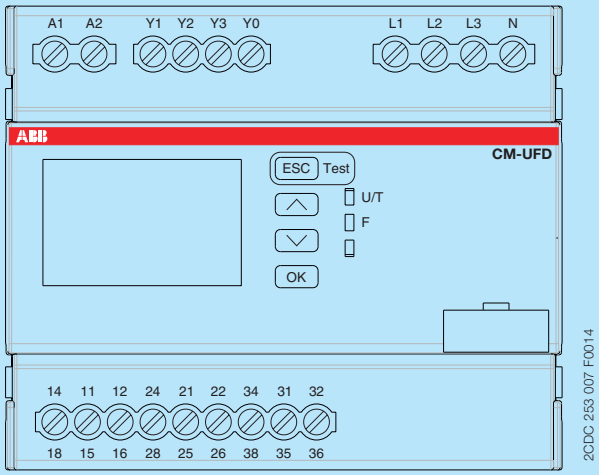

A1-A2	Control supply voltage U_s
L1, L2, L3, N	Measuring inputs
Y1-Y0	Control input 1: Feedback from switching device 1
Y2-Y0	Control input 2: Feedback from switching device 2
Y3-Y0	Control input 3: Remote trip, suppress Y1, suppress Y2, suppress Y1/Y2 or suppress vector shift detection
11_{15}-12_{16}/14_{18}	Output relay 1: Relay for tripping switching device 1 of the section switch, closed-circuit principle
21_{25}-22_{26}/24_{28}	Output relay 2: Relay for tripping switching device 2 of the section switch, closed-circuit principle
31_{35}-32_{36}/34_{38}	Output relay 3: Closing command for circuit breaker motor, configuration possibilities: closed-circuit principle, open-circuit principle, disabled or synchronous with R1/R2

Configuration

The relay is delivered with default settings in accordance to VDE-AR-N 4105 table 2. Thanks to the wide backlit display and to appropriate buttons all parameters can be easily set. The user-friendly menu structure starts with the main page that shows the real time measured values. Use the arrow keys to switch between the real time voltages and the 10-minutes average voltages.

Basic operation

Back light of the display switches off automatically after an adjustable duration. With a dark display, press any button to light it up again.

Measurement screen:
ESC > 3 s: Test function
Arrow buttons: next measurement display
OK: menu

Menu:
ESC: leave the menu/submenu
Arrow buttons: select the submenu/parameter, > 1 s scroll
OK: enter the submenu/parameter

Adjust parameters:
ESC: move to the previous digit or cancel the change, > 1 s cancel the change
Arrow buttons: change the parameter, > 1 s scroll
OK: move to the next digit or confirm the change, > 1 s confirm the change

Password protection

Every CM-UFD.M31 is delivered with the same default password [0000] for protection of its settings. In order to protect the device from unwanted changes, the password must be changed and the password protection must be enabled. With enabled password protection you can view the parameters, modifications are only possible after having entered the password. If the input password is correct, the protection will be disabled until you leave the menu. The parameters “language”, “switch-off delay” and “contrast” are not password protected.

Designation of the protective functions according to VDE-AR-N 4105 and BDEW

Device parameters	acc. to VDE-AR-N 4105 para. 6.5.2	acc. to BDEW table 3.2.3.3-2
Overvoltage >U_{AV}	Voltage increase protection U>	*not required*
Overvoltage >U1	Voltage increase protection U>>	*not required*
Overvoltage >U2	*not required*	Voltage increase protection U>>
Undervoltage <U1	Voltage decrease protection U<	Voltage decrease protection U<
Undervoltage <U2	*not required*	Voltage decrease protection U<<
Overfrequency >F1	Frequency increase protection f>	Frequency increase protection f>
Overfrequency >F2	*not required*	*not required*
Underfrequency <F1	Frequency decrease protection f<	Frequency decrease protection f<
Underfrequency <F2	*not required*	*not required*

Menu structure

The following tables show the submenu structure and configuration possibilities as well as the two sets of pre-settings according to VDE-AR-N 4105 and BDEW, which can be loaded in the submenu “General settings” -> “Load settings”. Additionally, 5 sets of self-defined pre-settings can be saved in the memory and loaded by the user.

Submenu: Nominal voltage



Contents of submenu	Configuration possibilities	Step size	VDE-AR-N 4105	BDEW
Measuring principle	[3L-N + 3L-L], [3L-N], [3L-L], [1L-N]		3L-N + 3L-L	3L-N
Nominal voltage	[57.7] - [230.9] V L-N / [99.9] - [400.0] V L-L	0.1 V	230 V L-N / 398.4 V L-L	230 V L-N

Submenu: I/O setup



Contents of submenu	Options	Configuration possibilities	Step size	VDE-AR-N 4105	BDEW
Relay 3	Working prinicple	[closed-circuit], [open-circuit], [disabled], [synchronous with R1/R2]		disabled	disabled
	ON-delay	[0.00] - [10.00] s	0.01 s	0 s	0 s
	ON-time	[0.05] - [10.00] s	0.01 s	0.5 s	0.5 s
Feedback Y1	Working prinicple	[normally closed], [normally open], [auto detection], [disabled]		normally closed	disabled
	Trip window	[0.05] - [0.50] s	0.01 s	0.1 s	0.1 s
	Release window	[0.50] - [600.00] s	0.01 s	0.5 s	0.5 s
Feedback Y2	Working prinicple	[normally closed], [normally open], [auto detection], [disabled]		normally closed	disabled
	Trip window	[0.05] - [0.50] s	0.01 s	0.1 s	0.1 s
	Release window	[0.50] - [600.00] s	0.01 s	0.5 s	0.5 s
Control input Y3	Function	[remote trip], [suppress Y1], [suppress Y2], [suppress Y1/Y2], [suppress VS]		remote trip	remote trip
	Working prinicple	[normally closed], [normally open], [disabled]		disabled	disabled
Auto reconnection	Number of attempts	[0] - [3]	1	0	0

Submenu: Monitoring functions

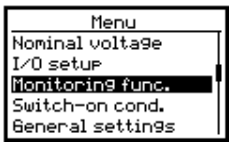

Contents of submenu	Options	Configuration possibilities	Step size	VDE-AR-N 4105	BDEW
Overvoltage >U_{AV}	Monitoring	[disabled], [enabled]		enabled	disabled
	Threshold value	[1.000] - [1.300] x U_n	0.005 x U_n	1.1 x U_n	1.1 x U_n
	Hysteresis	[0.1] - [10.0] %	0.1 %	0.1 %	0.1 %
Overvoltage >U1	Monitoring	[disabled], [enabled]		enabled	disabled
	Threshold value	[1.000] - [1.300] x U_n	0.005 x U_n	1.15 x U_n	1.15 x U_n
	Hysteresis	[0.5] - [10.0] %	0.1 %	1 %	1 %
	Tripping delay	[0.06] - [600.00] s	0.01 s	0.1 s	0.1 s
Overvoltage >U2	Monitoring	[disabled], [enabled]		disabled	enabled
	Threshold value	[1.000] - [1.300] x U_n	0.005 x U_n	1.15 x U_n	1.2 x U_n
	Hysteresis	[0.5] - [10.0] %	0.1 %	1 %	1 %
	Tripping delay	[0.06] - [600.00] s	0.01 s	0.1 s	0.1 s
Undervoltage <U1	Monitoring	[disabled], [enabled]		enabled	enabled
	Threshold value	[0.100] - [1.000] x U_n	0.005 x U_n	0.8 x U_n	0.8 x U_n
	Hysteresis	[0.5] - [10.0] %	0.1 %	1 %	1 %
	Tripping delay	[0.06] - [600.00] s	0.01 s	0.1 s	2.4 s
Undervoltage <U2	Monitoring	[disabled], [enabled]		disabled	enabled
	Threshold value	[0.100] - [1.000] x U_n	0.005 x U_n	0.8 x U_n	0.45 x U_n
	Hysteresis	[0.5] - [10.0] %	0.1 %	1 %	1 %
	Tripping delay	[0.06] - [600.00] s	0.01 s	0.1 s	0.3 s
Overfrequency >F1	Monitoring	[disabled], [enabled]		enabled	enabled
	Threshold value	[50.00] - [65.00] Hz	0.01 Hz	51.5 Hz	51.5 Hz
	Hysteresis	[0.05] - [4.00] Hz	0.01 Hz	0.1 Hz	0.1 Hz
	Tripping delay	[0.06] - [600.00] s	0.01 s	0.1 s	0.1 s
Overfrequency >F2	Monitoring	[disabled], [enabled]		disabled	disabled
	Threshold value	[50.00] - [65.00] Hz	0.01 Hz	51.5 Hz	51.5 Hz
	Hysteresis	[0.05] - [4.00] Hz	0.01 Hz	0.1 Hz	0.1 Hz
	Tripping delay	[0.06] - [600.00] s	0.01 s	0.1 s	0.1 s
Underfrequency <F1	Monitoring	[disabled], [enabled]		enabled	enabled
	Threshold value	[45.00] - [60.00] Hz	0.01 Hz	47.5 Hz	47.5 Hz
	Hysteresis	[0.05] - [4.00] Hz	0.01 Hz	0.1 Hz	0.1 Hz
	Tripping delay	[0.06] - [600.00] s	0.01 s	0.1 s	0.1 s
Underfrequency <F2	Monitoring	[disabled], [enabled]		disabled	disabled
	Threshold value	[45.00] - [60.00] Hz	0.01 Hz	47.5 Hz	47.5 Hz
	Hysteresis	[0.05] - [4.00] Hz	0.01 Hz	0.1 Hz	0.1 Hz
	Tripping delay	[0.06] - [600.00] s	0.01 s	0.1 s	0.1 s
ROCOF	Monitoring	[disabled], [enabled]		disabled	disabled
	Threshold value	[0.100] - [5.000] Hz/s	0.005 Hz/s	1 Hz/s	1 Hz/s
	Number of cycles	[4] - [50]	1	50	50
	Tripping delay	[0.06] - [600.00] s	0.01 s	0.1 s	0.1 s
	Error time	[0.50] - [600.00] s	0.01 s	30 s	30 s
Vector shift VS	Monitoring	[disabled], [enabled]		disabled	disabled
	Threshold value	[2.0] - [40.0] °	0.1 °	10 °	10 °
	Error time	[0.50] - [600.00] s	0.01 s	30 s	30 s

Submenu: Switch-on conditions



Contents of submenu	Options	Configuration possibilities	Step size	VDE-AR-N 4105	BDEW
Switch-on delay	Switch-on delay	[1.00] - [600.00] s	0.01 s	60 s	60 s
	Short interruption	[disabled], [enabled]		enabled	disabled
Voltage window	Monitoring	[disabled], [enabled]		enabled	disabled
	Minimum	[0.100] - [1.000] x U_n	0.005 x U_n	0.85 x U_n	0.95 x U_n
	Maximum	[1.000] - [1.300] x U_n	0.005 x U_n	1.1 x U_n	1.2 x U_n
Frequency window	Monitoring	[disabled], [enabled]		enabled	disabled
	Minimum	[45.00] - [60.00] Hz	0.01 Hz	47.5 Hz	47.5 Hz
	Maximum	[50.00] - [65.00] Hz	0.01 Hz	50.05 Hz	50.05 Hz

Submenu: General settings



Contents of submenu	Options	Configuration possibilities
Language	Language	[English], [Deutsch]
Display	Switch-off delay	[10] - [600] s
	Contrast	[0] - [9]
Password	Protection	[disabled], [enabled]
	Change password	[***]
Load settings	"Setting name“	[VDE-ARN-N 4105], [BDEW], ["own setting"]
Save settings	„Setting name“	
Information		

Submenu: Error memory



Contents of submenu	Options	Configuration possibilities
Error list		
Error recording	Remote trip	[disabled], [enabled]
	Power OFF	[disabled], [enabled]
Reset error memory		
Operating counter		
Cumulated OFF-time		

Display and failure messages

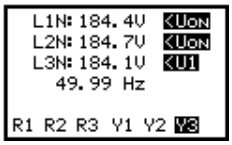

The voltage at L3 has fallen below the first undervoltage threshold. The voltages at L1 and L2 have fallen below the switch-on conditions, yet not below the undervoltage threshold.

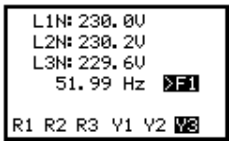

The first overfrequency threshold was exceeded.

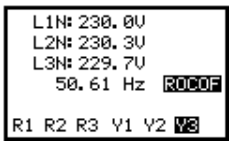

The threshold for rate of change of frequency was exceeded.

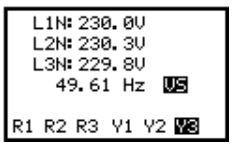

The threshold for vector shift detection was exceeded.

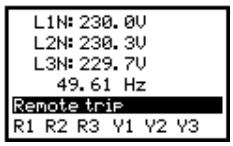

Remote trip from control input Y3-Y0 detected.

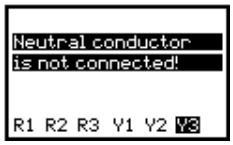

The neutral conductor is disconnected or interrupted.

Please check wiring.

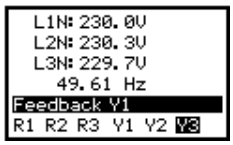

Error in feedback loop Y1-Y0, e.g. wiring failure or welded feedback contact.

Please check wiring.

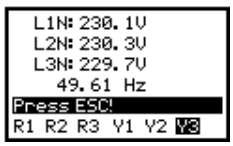

Error in feedback loop is removed. Press ESC to reset the grid feeding monitoring relay.

Error memory

The last 99 events that caused tripping of the grid feeding monitoring relay, as well as any interruption of the control supply voltage, will be recorded by the device. The type of error as well as the time stamp is recorded in the internal error list, accessible via the menu “Error memory”. The list is stored in a non-volatile memory which can be reset by the user.

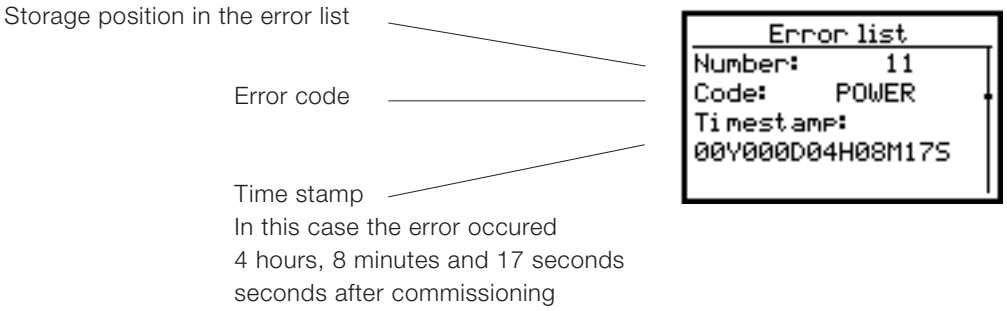

Error code	Explanation
AVL1N>U_{AV} or AVL2N>U_{AV} or AVL3N>U_{AV}	Overvoltage U_{AV} (10-minutes average value)
AVL12>U_{AV} or AVL23>U_{AV} or AVL31>U_{AV}	Overvoltage U_{AV} (10-minutes average value)
L1N>U1 or L2N>U1 or L3N>U1	Overvoltage U1
L12>U1 or L23>U1 or L31>U1	Overvoltage U1
L1N>U2 or L2N>U2 or L3N>U2	Overvoltage U2
L12>U2 or L23>U2 or L31>U2	Overvoltage U2
L1N<U1 or L2N<U1 or L3N<U1	Undervoltage U1
L12<U1 or L23<U1 or L31<U1	Undervoltage U1
L1N<U2 or L2N<U2 or L3N<U2	Undervoltage U2
L12<U2 or L23<U2 or L31<U2	Undervoltage U2
F>F1	Overfrequency F1
F>F2	Overfrequency F2
F<F1	Underfrequency F1
F<F2	Underfrequency F2
ROCOF	ROCOF
VECTOR	Vector shift
REMOTE	Remote trip
NEUTRAL	Interrupted neutral conductor
POWER	Supply voltage is disconnected or too low
FB1	Failure in feedback loop Y1-Y0
FB2	Failure in feedback loop Y2-Y0
TEST	Test function
Exxx (e.g. E123)	Internal failure (logic or hardware of the device)

Connection and wiring

Example of single-phase application

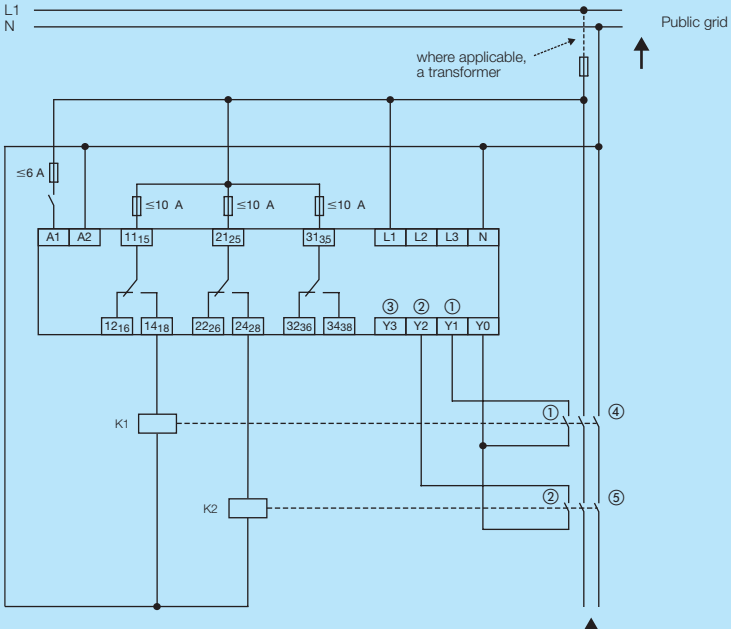

① Control input 1, feedback loop for switching device 1
② Control input 2, feedback loop for switching device 2
③ Control input 3 (e.g. for remote trip)
④ Switching device 1 of the section switch
⑤ Switching device 2 of the section switch

Example of three-phase application

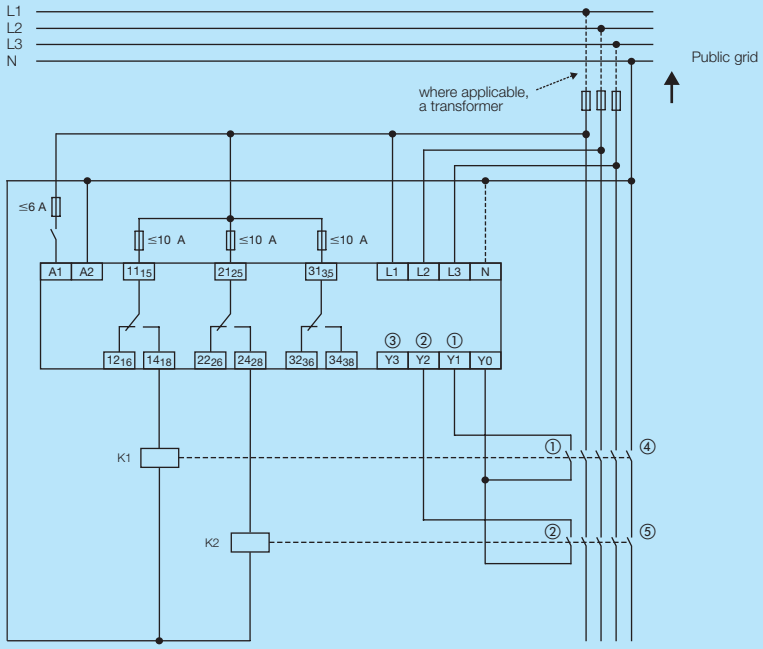

① Control input 1, feedback loop for switching device 1
② Control input 2, feedback loop for switching device 2
③ Control input 3 (e.g. for remote trip)
④ Switching device 1 of the section switch
⑤ Switching device 2 of the section switch

Technical data

Data at T_a = 25 °C and rated values, unless otherwise indicated

Input circuits

Supply circuit		**A1, A2**
Rated control supply voltage U_s		24-240 V AC/DC
Rated control supply voltage U_s tolerance		-15…+10 %
Rated frequency		DC or 50 Hz
Frequency range AC		40-60 Hz
Typical current / power consumption	24 V DC	64 mA / 1.5 W
	230 V AC	6.4 mA / 1.5 VA
External fusing (necessary)		6 A gG (gL) or cirucit breaker 6 A with B characteristic
Power failure buffering time		200 ms, according to LVFRT [1]
Measuring circuit		**L1, L2, L3, N**
Measuring ranges	voltage (4-wire system L1, L2, L3-N)	0-312 V AC
	voltage (3-wire system L1, L2, L3)	0-540 V AC
	voltage (2-wire system L-N)	0-312 V AC
	frequency	40-70 Hz
Rated frequency of the measuring signal		50 Hz
Accuracy of measurements	voltage	≤ 0.5 % ± 0.5 V
	frequency	± 20 mHz
	delay times	≤ 0.1 % ± 20 ms
Accuracy within the temperature range		ΔU ≤ 0.02 %/°C
Monitoring functions	overvoltage 10-min average (>U_{AV})	threshold adjustable, 1.000-1.300 * U_n in 0.005 * U_n steps
	overvoltage (>U1)	threshold adjustable, 1.000-1.300 * U_n in 0.005 * U_n steps
	overvoltage (>U2)	threshold adjustable, 1.000-1.300 * U_n in 0.005 * U_n steps
	undervoltage (<U1)	threshold adjustable, 0.100-1.000 * U_n in 0.005 * U_n steps
	undervoltage (<U2)	threshold adjustable, 0.100-1.000 * U_n in 0.005 * U_n steps
	overfrequency (>F1)	threshold adjustable, 50.00-65.00 Hz in 0.01 Hz steps
	overfrequency (>F2)	threshold adjustable, 50.00-65.00 Hz in 0.01 Hz steps
	underfrequency (<F1)	threshold adjustable, 45.00-60.00 Hz in 0.01 Hz steps
	underfrequency (<F2)	threshold adjustable, 45.00-60.00 Hz in 0.01 Hz steps
	ROCOF	threshold adjustable, 0.100-5.000 Hz in 0.005 Hz steps
	vector shift	threshold adjustable, 2.0-40.0 ° in 0.1 ° steps
	interrupted neutral conductor	enabled if a measruing principle with neutral is selected
Hysteresis related to the threshold values	overvoltage 10-min average (>U_{AV})	adjustable, 0.1-10.0 % in 0.1 % steps
	overvoltage (>U1, >U2)	adjustable, 0.5-10.0 % in 0.1 % steps
	undervoltage (<U1, <U2)	adjustable, 0.5-10.0 % in 0.1 % steps
	overfrequency (>F1, >F2)	adjustable, 0.05-4.00 Hz in 0.01 Hz steps
	underfrequency (<F1, <F2)	adjustable, 0.05-4.00 Hz in 0.01 Hz steps
Measuring cycle of ROCOF		adjustable, 4-50 periods
Control circuits		**Y0, Y1, Y2, Y3**
Number		3
Type of triggering		volt-free triggering, signal source Y0
Function of the control inputs	Y1-Y0 control input 1	feedback from switching device 1
	Y2-Y0 control input 2	feedback from switching device 2
	Y3-Y0 control input 3	remote trip; suppression of Y1, Y2, Y1/Y2 or vector shift detect.
Electrical isolation	from supply voltage	yes
	from the measuring circuit	no
	from the relay outputs	yes
Max. switching current in the control circuit		6 mA
No-load voltage at the control inputs (Y1-Y0, Y2-Y0, Y3-Y0)		22-26 V DC
Minimum control pulse length		20 ms
Max. cable length at the control inputs (unshielded)		10 m

[1] LVFRT = Low Voltage Fault Ride Through

Timing functions

Switch-on delay (prior to first grid connection or reconnection after interruption)		adjustable, 1.00-600.00 s in 0.01 s steps
Tripping delay	overvoltage 10-min average (>U_{AV})	< 3 s
	overvoltage (>U1, >U2)	adjustable, 0.06-600.00 s in 0.01 s steps; +0 ms / -50 ms
	undervoltage (<U1, <U2)	adjustable, 0.06-600.00 s in 0.01 s steps; +0 ms / -50 ms
	overfrequency (>F1, >F2)	adjustable, 0.06-600.00 s in 0.01 s steps; +0 ms / -50 ms
	underfrequency (<F1, <F2)	adjustable, 0.06-600.00 s in 0.01 s steps; +0 ms / -50 ms
	ROCOF	adjustable, 0.06-600.00 s in 0.01 s steps; +0 ms / -50 ms
	vector shift	< 50 ms
	interrupted neutral conductor	< 150 ms
Error time	ROCOF	adjustable, 0.5-600.00s in 0.01 s steps
	vector shift	adjustable, 0.5-600.00s in 0.01 s steps
Trip window (feedback loops Y1-Y0, Y2-Y0)		adjustable, 0.05-0.50 s in 0.01 s steps
Release window (feedback loops Y1-Y0, Y2-Y0)		adjustable, 0.50-600.00 s in 0.01 s steps
Time error within the temperature range		$\Delta t \leq 0.01$ %

User interface

Indication of operational states		
Control supply voltage applied / timing	U/T	LED green on / flashing
Fault message	F	LED red on
For details see the message on the display		
Display		
Back light	on	press any button
	off	switch-off delay adjustable, 10-600 s (default 10 s)
Operating temperature range of the display	clearly visible	-20…+60 °C
Resolution		112 x 64 pixel
Display size		36 x 22 mm
Operating elements		
4 push-buttons for menu navigation, entering and setting		

Output circuits

Kind of output	11-12/14 (15-16/18)	1st c/o (SPDT) contact, tripping relay for switching device 1
	21-22/24 (25-26/28)	2nd c/o (SPDT) contact, tripping relay for switching device 2
	31-32/34 (35-36/38)	3rd c/o (SPDT) contact, closing command for breaker motor
Operating principle	11-12/14 (15-16/18)	closed-circuit principle [1]
	21-22/24 (25-26/28)	closed-circuit principle [1]
	31-32/34 (35-36/38)	open-circuit, closed-circuit, disabled or synchronous with R1/R2 configurable
Contact material		AgNi alloy, Cd-free
Rated operational voltage U_e (IEC/EN 60947-1)		300 V
Minimum switching voltage / minimum switching current		24 V / 10 mA
Maximum switching voltage / maximum switching current		see load limit curves
Rated operational current I_e (IEC/EN 60947-5-1)	AC12 (resisitive) at 230 V	4 A
	AC15 (inductive) at 230 V	3 A
	DC12 (resistive) at 24 V	4 A
	DC13 (inductive) at 24 V	2 A
Mechanical lifetime		30 x 10^6 switching cycles
Electrical lifetime	at AC12, 230 V AC, 4 A	50 x 10^3 switching cycles
Maximum fuse rating to achieve short-circuit protection	n/c contact	10 A fast-acting or circuit breaker 10 A with B characteristic
	n/o contact	10 A fast-acting or circuit breaker 10 A with B characteristic
Maximum closing current (short time)	t < 20 ms	30 A
	t < 80 ms	17 A
Conventional enclosed thermal current I_{the} (IEC/EN 60947-1)		5 A

[1] Closed-circuit principle: Output relay de-energizes if a fault is occuring
Open-circuit principle: Output relay energizes if a fault is occuring

General data

MTBF		on request
Repeat accuracy (constant parameters)		< ±0.5 %
Duty time		100 %
Dimensions (W x H x D)	product dimensions	108 x 90 x 67 mm (4.25 x 3.54 x 2.64 in)
	packaging dimensions	121 x 99 x 71 mm (4.76 x 3.90 x 2.80 in)
Weight	net weight	0.306 kg (0.675 lb)
	gross weight	0.360 kg (0.794 lb)
Material of housing		PA666FR
Mounting		DIN rail (IEC/EN 60715) TH 35-7.5 and TH 35-15, snap-on mounting without any tool
Mounting position		any
Minimum distance to other units	horizontal / vertical	not necessary
Degree of protection	housing / terminals	IP20

Electrical connection

Wire size	fine-strand with wire end ferrule	1 x 0.25-4 mm² (1 x 24-12 AWG)
		2 x 0.25-0.75 mm² (2 x 24-18 AWG)
	fine-strand without wire end ferrule	1 x 0.2-4 mm² (1 x 24-12 AWG)
		2 x 0.2-1.5 mm² (2 x 24-16 AWG)
	rigid	1 x 0.2-6 mm² (1 x 24-10 AWG)
		2 x 0.2-1.5 mm² (2 x 24-16 AWG)
Stripping length		8 mm (0.31 in)
Tightening torque		0.5-0.6 Nm (4.4-5.3 lb.in)

Environmental data

Ambient temperature ranges	operation	-20...+60 °C
	storage	-20...+80 °C
Climatic class (IEC/EN 60721-3-1)		3K5 (w/o condensation, w/o icing)
Damp heat, cyclic (IEC/EN 60068-2-30)		6 x 24 h cycle, 55 °C, 95 % RH
Vibration, sinusoidal (IEC/EN 60255-21-1)		Class 2
Shock (IEC/EN 60255-21-2)		Class 2

Isolation data

Rated insulation voltage U_i	supply/measuring/output circuits	600 V
(IEC/EN 60947-1, IEC/EN 60664-1)	output 1/output 2/output 3	300 V
Rated impulse withstand voltage U_{imp}	supply/measuring/output circuits	6 kV; 1.2/50 µs
(IEC/EN 60947-1, IEC/EN 60664-1)	output 1/output 2/output 3	4 kV; 1.2/50 µs
Basic insulation	supply/measuring/output circuits	600 V
(IEC/EN 60664-1)	output 1/output 2/output 3	300 V
Protective separation	supply/measuring/output circuits	250 V
(IEC/EN 61140, EN 50178)	output 1/output 2/output 3	250 V
Test voltage, routine test	supply/measuring/output circuits	2.2 kV, 50 Hz, 1 s
(IEC/EN 60255-5, IEC/EN 61010-1)	output 1/output 2/output 3	2.2 kV, 50 Hz, 1 s
Pollution degree (IEC/EN 60664-1)		3
Overvoltage category (IEC/EN 60664-1)		III

Standards

Product standard	IEC/EN 60255-1
Application standards (grid feeding standard of Germany)	VDE-AR-N 4105: 2011-08; BDEW, June 2008 (“Technische Richtlinie – Erzeugungsanlagen am Mittelspannungsnetz”) including supplementary provisions of January 2013
Low Voltage Directive	2006/95/EC
EMC Directive	2004/108/EC
RoHS Directive	2011/65/EC

Electromagnetic compatibility

Interference immunity to		IEC/EN 61000-6-1, IEC/EN 61000-6-2
electrostatic discharge	IEC/EN 61000-4-2	Level 3 (6 kV / 8 kV)
radiated, radio-frequency, electromagnetic field	IEC/EN 61000-4-3	Level 3, 10 V/m
electrical fast transient/burst	IEC/EN 61000-4-4	Level 3, 2 kV / 5 kHz
surge	IEC/EN 61000-4-5	Level 3, installation class 3, supply and measuring input 1 kV L-L, 2 kV L-earth
conducted disturbances, induced by radio-frequency fields	IEC/EN 61000-4-6	Level 3, 10 V
voltage dips, short interruptions and voltage variations	IEC/EN 61000-4-11	Class 3
harmonics and interharmonics	IEC/EN 61000-4-13	Class 3
Interference emission		IEC/EN 61000-6-3, IEC/EN 61000-6-4
high-frequency radiated	IEC/CISPR 22, EN 55022	Class B
high-frequency conducted	IEC/CISPR 22, EN 55022	Class B

Technical diagrams

Load limits curves

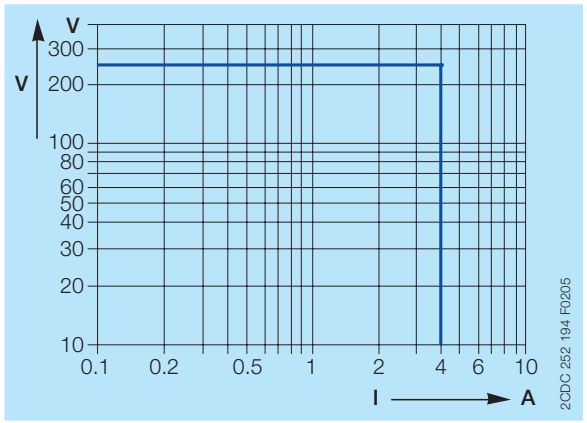

AC load (resistive)

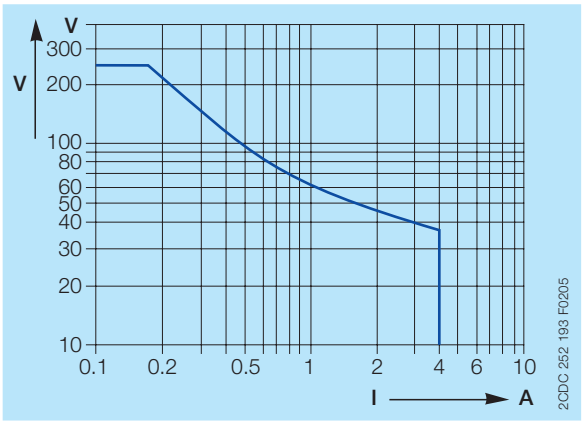

DC load (resistive)

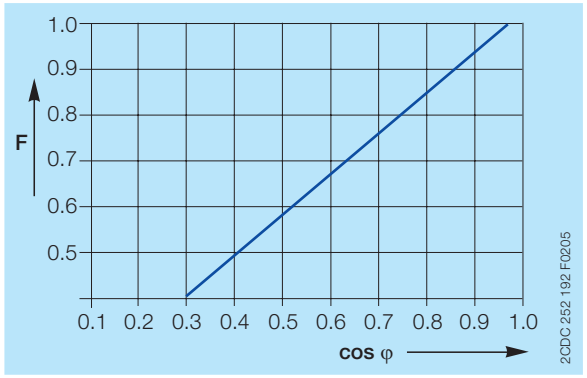

Derating factor F at inductive AC load

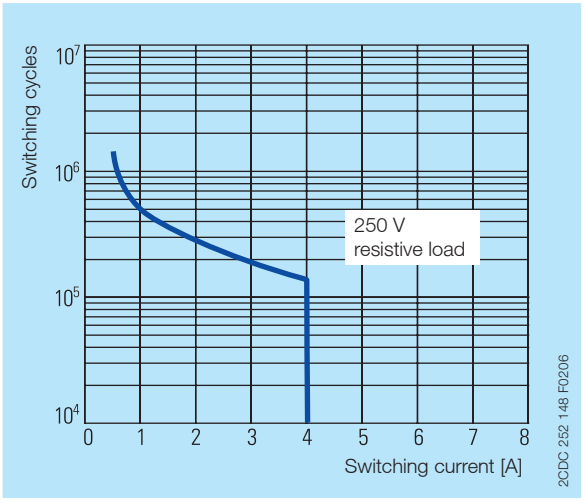

Contact lifetime

Dimensions

in **mm** and *inches*

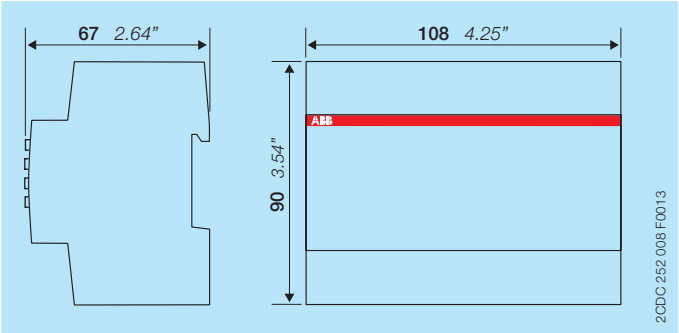

Further documentation

Document title	Document type	Document number
Electronic products and relays	Catalog	2CDC 110 004 C02xx
CM-UFD.M31 Grid feeding monitoring relay	Instruction sheet	1SVC 560 511 M0000

You can find the documentation on the internet at www.abb.com/lowvoltage -> Control Products -> Electronic Relays and Controls -> Three Phase Monitors

CAD system files

You can find the CAD files for CAD systems at http://abb-control-products.partcommunity.com/PARTcommunity/Portal/abb-control-products -> Low Voltage Products & Systems -> Control Products -> Electronic Relays and Controls -> Three phase Monitors

Contact us

ABB STOTZ-KONTAKT GmbH
P. O. Box 10 16 80
69006 Heidelberg, Germany
Phone: +49 (0) 6221 7 01-0
Fax: +49 (0) 6221 7 01-13 25
E-mail: info.desto@de.abb.com

You can find the address of your
local sales organisation on the
ABB home page
http://www.abb.com/contacts
-> Low Voltage Products and Systems

Document number 2CDC 112 208 D0201 Rev B (08.2014)

Note:
We reserve the right to make technical changes or modify the contents of this document without prior notice. With regard to purchase orders, the agreed particulars shall prevail. ABB AG does not accept any responsibility whatsoever for potential errors or possible lack of information in this document.

We reserve all rights in this document and in the subject matter and illustrations contained therein. Any reproduction, disclosure to third parties or utilization of its contents – in whole or in parts – is forbidden without prior written consent of ABB AG.

Copyright© 2014 ABB
All rights reserved