PT ROTARY SWITCH

RoHS COMPLIANT

GENERAL ELECTRICAL & MECHANICAL SPECIFICATION

Switch Rating :	500mA@250Vac/dc resistive load
Life:	>10,000 Cycles
Operating Temperature:	-30ºC to +85 ºC
Proof Voltage:	1,000Vac (Initial)
Insulation Resistance:	>999 MΩ at 500Vdc (Initial)
Contact Resistance:	<50 mΩ (Initial)
Operating Torque (nominal)	Standard 5.6 cNm
End Stop Torque (minimum):	0.80 Nm
Wafer Circuit Board:	Epoxy Glass Fibre
Housing/Bush:	Polyamide 6.6 G.F. V0 Rated
Spindle:	Polyamide 6.6 G.F. V0 Rated
Moving Contact:	Phosphor Bronze Ag Plated
P/C Track:	Copper, Ag Plated
Terminals:	Brass, CZ108, Sn Plated
Contact Carrier:	Polycarbonate

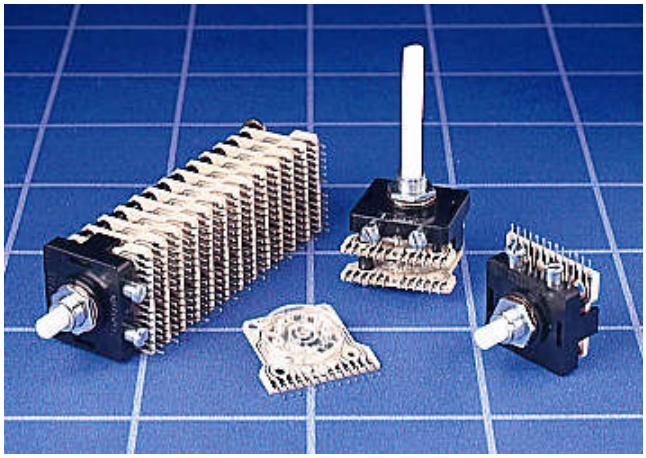

GENERAL FEATURES

- Made in UK
- Multi wafer PCB switch.
- Standard 30º indexing
- P.C. Terminals on 2.54mm pitch
- Shorting MBB (only 30º indexing or Non Shorting BBM contacts
- Standard insulated spacers (6.35mm/7.63mm/10.16mm)
- **Special options:**36 º, 60 º or 90º indexing, gold flashed or gold Plated contacts (2.5 microns gold over 2 microns silver over 2 microns nickel).
- Adjustable stop, base mounting with brass fixing bush, spindles with special flats non-standard wafer spacers.

PC TERMINAL LAYOUTS VIEWED FROM KNOB END OF SPINDLE

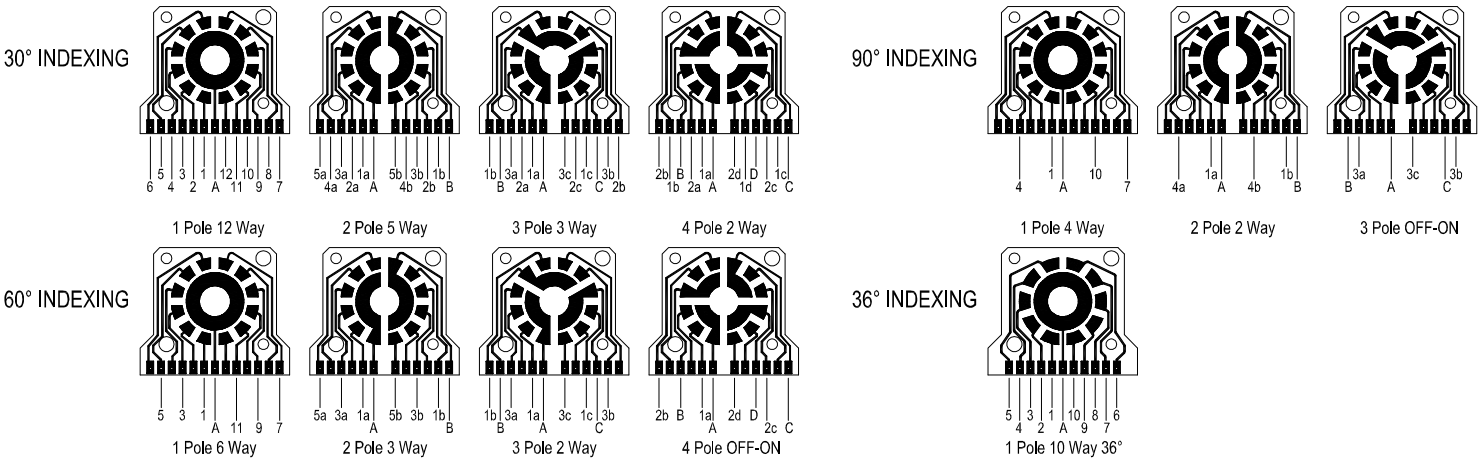

	MAXIMUM NUMBER OF POSITIONS (WAYS) PER WAFER			
No. Of Poles	**30 º Index**	**36 º Index**	**60 º Index**	**90 º Index**
1	12 No Stops	10	6	4
2	5	-	3	2
3	3	-	2	OFF-ON
4	2	-	OFF-ON	-

Lorlin Electronics Ltd, Harwood Industrial Estate, Harwood Rd, Littlehampton, W. Sussex BN17 7AT England
Tel (+44) 01903 725121 Fax (+44) 01903 726808 E-mail sales@lorlin.co.uk | www.lorlin.co.uk

PT ROTARY SWITCH

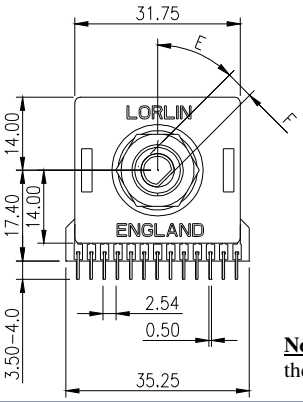

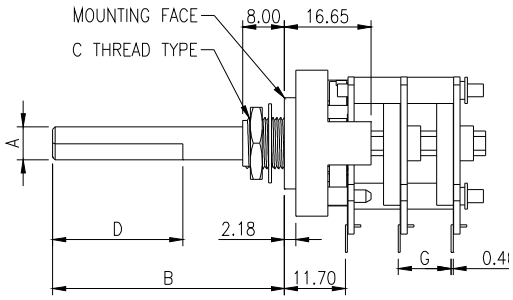

BASE MOUNT OPTION
Base mounting option.
Necessary spacers are supplied when this option is specified.

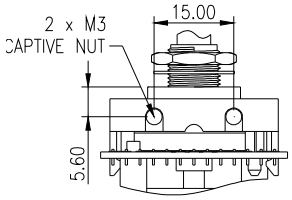

Note: OPTIONAL SPINDLE FLAT SHOWN. The Angle of the spindle flat is shown when the switch is set in the fully anti-clockwise position (ie position1) viewed from the knob end on the spindle.

TO SPECIFY PART NUMBERS FOR SINGLE WAFER SWITCHES				
	STANDARD METRIC		STANDARD IMPERIAL	
CIRCUITRY AT 30º INDEXING	Shorting (MBB)	Non Shorting (BBM)	Shorting (MBB)	Non Shorting (BBM)
1 Pole 12 positions	PT6034	PT6003	PT6172	PT6015
1 Pole 12 Positions – No Stop	-	PT6002	-	PT6014
2 Pole 5 Positions	PT6035	PT6004	PT6474	PT6016
3 Pole 3 Positions	-	PT6005	-	PT6017
4 Pole 2 Positions	-	PT6006	-	PT6018
1 Pole 10 Positions (circuitry at 36º indexing)	-	PT6461	-	PT6462

	STANDARD DIMENSIONS						
	A	B	C	D	E	F	G
	SPINDLE DIAMETER	SPINDLE LENGTH	BUSH THREAD	SPINDLE FLAT LTH	SPINDLE ANGLE	SPINDLE FLAT DP	SPACER LENGTH
IMPERIAL	6.35mm	50mm	9.52 x 32TPI	No Flat	-	(5.5mm)	-
METRIC	6.0mm	50mm	M10 x 0.75	No Flat	-	(5.0mm)	-

ORDERING CODE FOR NON-STANDARD SWITCHES

P	T											

BASE MOUNTING HARDWARE
B = Fitted
O = Not Required

Moulded Spacers Between Wafers
B=6.35mm C=7.63mm
D=10.16mm

Spindle Length(B) FMF
Full mm ≤50mm

No. of WAFERS			
A	1	M	11
B	2	N	12
C	3	P	13
D	4	R	14
E	5	S	15
F	6	T	16
G	7	U	17
H	8	V	18
K	9	W	19
L	10		

INDEX ANGLE & No of POLES		
A	30º	1 Pole
B		2
C		3
D		4
E	60º	1 Pole
F		2
G		3
H		4
I	90º	1 Pole
J		2
K		3
L	36º	1 Pole

No of WAYS (POSITIONS)	
A	2
B	3
C	4
D	5
E	6
F	7
G	8
H	9
I	10
J	11
K	12
L	OFF/ON

	MBB OR BBM	CONTACT PLATING
A	BBM	SILVER
B	MBB	PLATE
C	BBM	GOLD
D	MBB	PLATE
E	BBM	GOLD
F	MBB	FLASH

	Spindle Ø (mm)	Spindle Depth	Bush Ø (mm)
A	6.0	Nil	M10
B	6.0	5.0mm	M10
C	6.35	Nil	9.52
D	6.35	5.5	9.52

LENGTH OF SPINDLE FLAT (mm)			
A	3	N	16
B	4	P	17
C	5	Q	18
D	6	R	19
E	7	S	20
F	8	T	21
G	9	U	22
H	10	V	23
I	11	W	24
J	12	X	No Flat
K	13		
L	14	Z	Full Flat
M	15		

ANGLE OF FLAT			
A	0º	N	195º
B	15 º	P	210º
C	30º	Q	225º
D	45º	R	240º
E	60º	S	255º
F	75º	T	270º
G	90º	U	285º
H	105	V	300 º
I	120º	W	315º
J	135º	X	No Flat
K	150º	Y	330º
L	165º	Z	345º
M	180º		

Please send drawing if your requirements cannot be fulfilled by using the ordering code
Special circuitry can be developed if required.

Lorlin Electronics Ltd, Harwood Industrial Estate, Harwood Rd, Littlehampton, W. Sussex BN17 7AT England
Tel (+44) 01903 725121 Fax (+44) 01903 726808 E-mail sales@lorlin.co.uk | www.lorlin.co.uk