PANEL SEALED METAL PUSHBUTTON

SERIES 48M-EM:

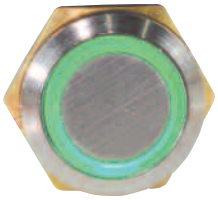

ACTUAL SIZE

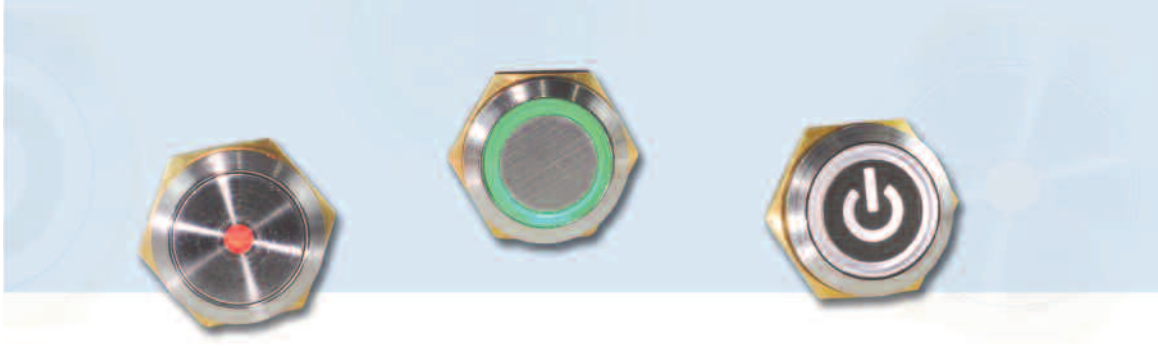

PANEL SEALED METAL PUSHBUTTON SWITCHES

Built on the proven series 48 platform these rugged switches come in stainless steel housings, electro-mechanical with either momentary or maintained action and lighted or unlighted versions. The variety of options in this compact package size make the 48M ideal for many applications: outdoor controls, security products, food processing and medical products.

KEY FEATURES:

- Momentary or Maintained Action
- Stainless Steel Housing
- Center Spot or Ring Illumination
- Variety of LED colors
- Electro-Mechanical
- Panel Sealed to IP67
- ROHS Compliant
- Gold Plated Contact and Terminals

APPLICATIONS

- Outdoor Controls
- Kiosks
- Security Equipment
- Medical Equipment
- Food Processing Equipment
- Military Equipment
- Industrial Machinery
- Transportation: Mass-Transit, Marine, Lift Trucks

ORDERING INFORMATION:

SWITCH FUNCTION:
1. MECHANICAL, MOMENTARY, SOLDER TERMINAL
2. MECHANICAL, MAINTAINED, SOLDER TERMINAL
5. MECHANICAL, MOMENTARY, PC TERMINAL
6. MECHANICAL, MAINTAINED, PC TERMINAL
A. MECHANICAL, MOMENTARY, WIRE LEADS
B. MECHANICAL, MAINTAINED, WIRE LEADS
9. SPECIAL, DIGITS ARE IN SERIAL ORDER

HOUSING MATERIAL:
1. STAINLESS STEEL
2. ZINC ALLOY CHROME PLATED

ILLUMINATION:
0. NON-LIT
1. CENTER SPOT ILLUMINATION
2. RING ILLUMINATION
3. ILLUMINATED POWER SYMBOL

LED COLOR:
N. NONE
G. GREEN L.E.D.
R. RED L.E.D.
A. AMBER L.E.D.
B. BLUE L.E.D.
W. WHITE L.E.D.

VOLTAGE RESISTER
IF BLANK *
05 5V FORWARD

48M- [ ] [ ] [ ] [ ] [ ]

* Current limiting resistor is required to limit LED forward current to 20 mA (not included).

STANDARDS / AGENCY / RATINGS:

Contact an Authorized Distributor or Factory for Pricing

PRODUCT DRAWINGS

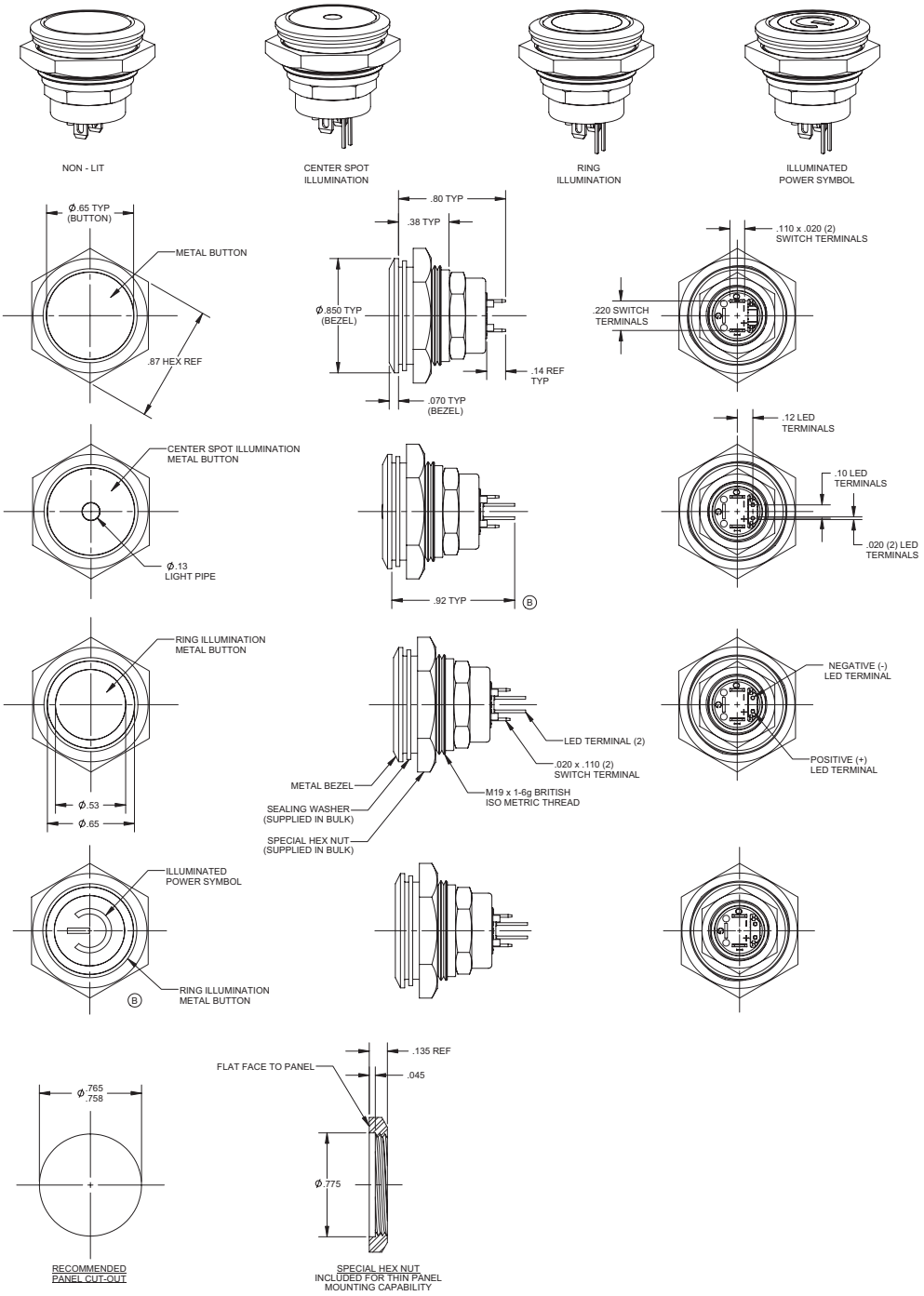

MECHANICAL / ELECTRICAL CHARACTERISTICS:

Circuit:
SPST-NO-DB

Button travel (nominal):
0.09 inches / 2.3 mm

Operating force (nominal):
3N / 306 grams

Contact bounce (nominal):
1 millisecond

Panel thickness:
0.50"– 0.150" 1.3 – 3.8mm)

Temperature index:
-40°C to +85°C

LED operating temperature:
-13° F to +185° F /
-25° C to +85° C

Torque (max):
10 inch pounds

LED operating temperature:
-13° F to +185° F /
-25° C to +85° C

Current ratings (resistive):
250mA @ 12VDC, 100K cycles

150mA @ 28VDC, 150K cycles (momentary)

100mA @ 48VDC, 100K cycles

10mA @ 12VDC, 1 million cycles (momentary)

ELECTRO-MECHANICAL

Dielectric strength:
1,000 VAC

Insulation resistance:
1 GΩ

Contact resistance:
50 mΩ max (initial)

PANEL MOUNTING AND CONSTRUCTION INFORMATION

The series 48M mounts easily into panels of minimum 0.50" (1.3 mm) and maximum 0.150" (3.8 mm) thickness. Front panel sealing to IP67 is achieved by a sealing o-ring fitted to the body of the switch before it is inserted into the panel hole cut-out. It is held onto the panel by means of a brass hex nut tightened down to a torque of 10 inch pounds to achieve the correct sealing pressure.

Copyright © 2010 ITW Switches 07/09

ITW Switches
SENSORS, SWITCHES, ELECTRONIC CONTROLS

Designs and specifications are subject to change without notice due to product improvement.

PANEL SEALED METAL PUSHBUTTON

SERIES 48M-SS:

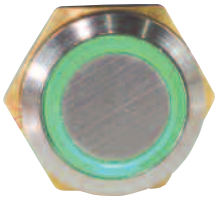

ACTUAL SIZE



PANEL SEALED METAL PUSHBUTTON SWITCHES

Built on the proven series 48 platform these rugged switches come in stainless steel housings, solid-state with either momentary or maintained action and lighted or unlighted versions. The variety of options in this compact package size make the 48M ideal for many applications: outdoor controls, security products, food processing and medical products.

KEY FEATURES:

- Momentary or Maintained Action
- Stainless Steel Housing
- Center Spot or Ring Illumination
- Variety of LED colors
- Solid State
- Panel Sealed to IP67
- ROHS Compliant
- Gold Plated Contact and Terminals

APPLICATIONS

- Outdoor Controls
- Kiosks
- Security Equipment
- Medical Equipment
- Food Processing Equipment
- Military Equipment
- Industrial Machinery
- Transportation: Mass-Transit, Marine, Lift Trucks

ORDERING INFORMATION:

SWITCH FUNCTION:
- **3.** SOLID STATE, MOMENTARY, SOLDER TERMINAL
- **4.** SOLID STATE, MAINTAINED, SOLDER TERMINAL
- **7.** SOLID STATE, MOMENTARY, PC TERMINAL
- **8.** SOLID STATE, MAINTAINED, PC TERMINAL
- **C.** SOLID STATE, , MOMENTARY, WIRE LEADS
- **D.** SOLID STATE, , MAINTAINED, WIRE LEADS
- **9.** SPECIAL, DIGITS ARE IN SERIAL ORDER

HOUSING MATERIAL:
- **1.** STAINLESS STEEL
- **2.** ZINC ALLOY CHROME PLATED

ILLUMINATION:
- **0.** NON-LIT
- **1.** CENTER SPOT ILLUMINATION
- **2.** RING ILLUMINATION
- **3.** ILLUMINATED POWER SYMBOL

LED COLOR:
- **N.** NONE
- **G.** GREEN L.E.D.
- **R.** RED L.E.D.
- **A.** AMBER L.E.D.
- **B.** BLUE L.E.D.
- **W.** WHITE L.E.D.

VOLTAGE RESISTER
- IF BLANK *
- **05** 5V FORWARD

48M- [ ] [ ] [ ] [ ] [ ]

* Current limiting resistor is required to limit LED forward current to 20 mA (not included).

STANDARDS / AGENCY / RATINGS:

RoHS COMPLIANT 2002 / 95 / EC

IEC IP67 COMPLIANT

Contact an Authorized Distributor or Factory for Pricing

PRODUCT DRAWINGS

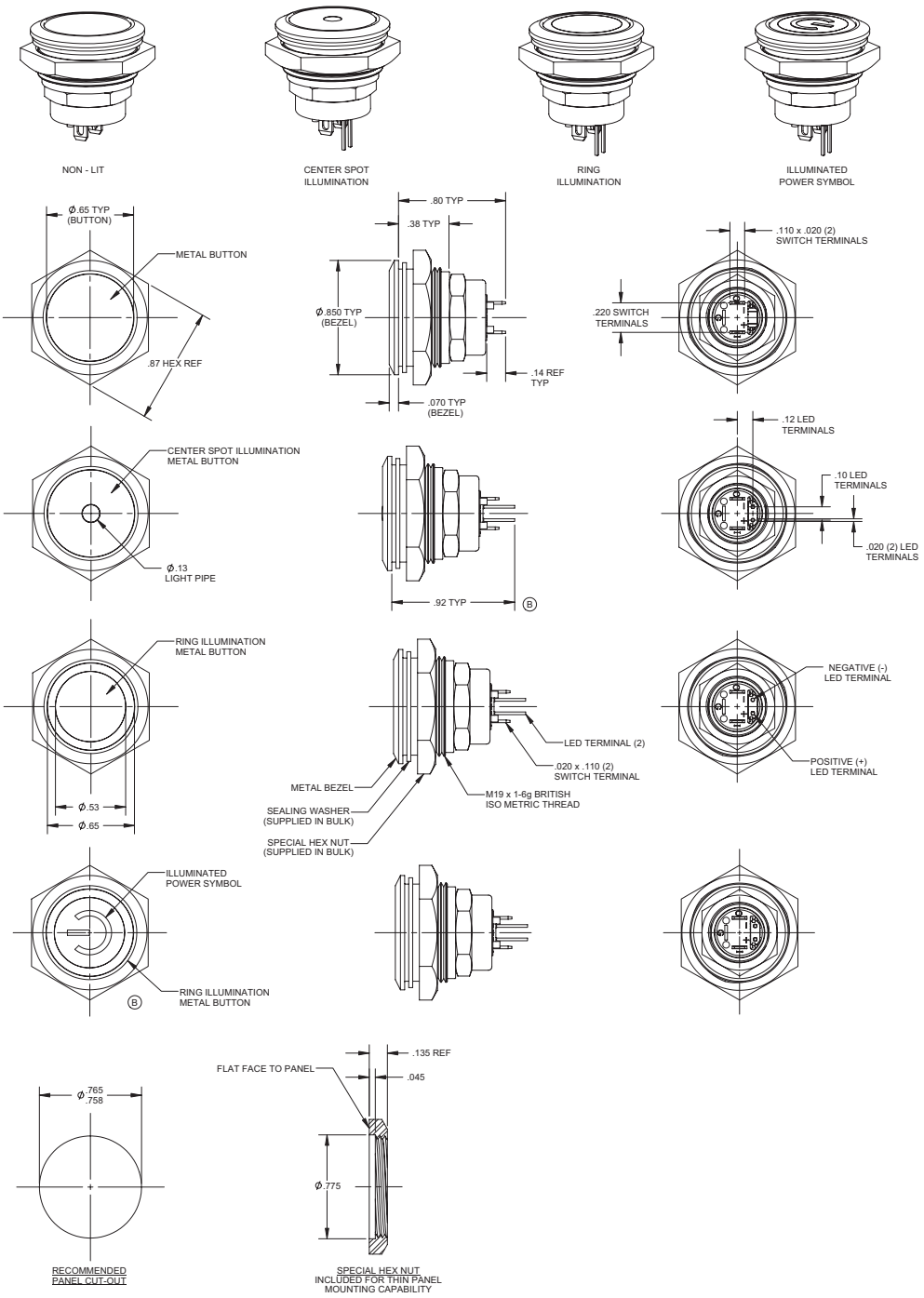

MECHANICAL / ELECTRICAL CHARACTERISTICS:

Circuit:
SPST-NO

Button travel (nominal):
0.09 inches / 2.3 mm

Life (mechanical) (nominal):
1,000,000 cycles (momentary)
100,000 cycles (maintained)

Operating force (nominal):
3N / 306 grams

Panel thickness:
0.02 – 0.12 inches / 0.5 – 3mm

Temperature index:
-40°F to + 185°F

LED operating temperature:
-13° F to +185° F /
-25° C to +85° C

Supply voltage:
4.2V to 24V, 26.5V Max.

Supply current:
B<Brp, Vcc=12V: 3mA Typ.
To 8mA Max.
B>Bop, Vcc=12V: 4mA Typ.
To 8mA Max.

Output current:
20 mA

Reverse battery voltage:
-30V Max.

Reverse output current:
-50 mA Max.

Torque (max):
10 inch pounds

PANEL MOUNTING AND CONSTRUCTION INFORMATION

The series 48M mounts easily into panels of minimum 0.50" (1.3 mm) and maximum 0.150" (3.8 mm) thickness. Front panel sealing to IP67 is achieved by a sealing o-ring fitted to the body of the switch before it is inserted into the panel hole cut-out. It is held onto the panel by means of a brass hex nut tightened down to a torque of 10 inch pounds to achieve the correct sealing pressure.

Copyright © 2010 ITW Switches 07/09

ITW Switches
SENSORS, SWITCHES, ELECTRONIC CONTROLS

Designs and specifications are subject to change without notice due to product improvement.