ASCO™ Solenoid Valves

3 way, NC/NO/U, Direct Operated, 1/8" or 1/4" Tapped

3/2 Series **356**

Features & Benefits

- *Wide range of flow and pressure ratings*
- *Quick disassembly of core tube for easy maintenance of internal parts*
- *Standard disc seal made of FPM, EPDM, NBR suitable for a wide range of operating temperatures and compatible with many fluids*
- *Standard manual operator allows an easy installation (1/8" version only)*
- *AC/DC interchangeability of the solenoid without disassembly of the valve (1/8" version only)*
- *UL429 and EN 60335 certified*
- *NSF 169 and EC 1935 / 2004 certified see "15-DIGIT PRODUCT CODE"*
- *Compact and low weight valve*
- *The solenoid valves satisfy all relevant EU and EAC directives*

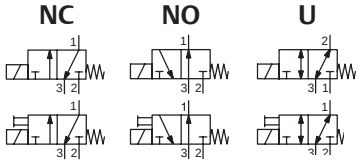



General

Differential pressure	See «SPECIFICATIONS» [1 bar =100 kPa]
Ambient temperature range	-10°C to +60°C (14°F to 140°F)
Maximum viscosity	40 cSt (mm²/s)
Response time	10 - 30 ms

fluids (∗)	temperature range (TS) [1]	seal materials (∗)
air, inert gas, water, oil hot water and steam [2]	0°C to +130°C (32°F to 266°F)	FPM (fluoroelastomer)
air, inert gas, water hot water and steam [2]	-10°C to +140°C (14°F to 284°F)	EPDM (ethylene propylene diene monomer)
air, inert gas, water, oil	-10°C to +90°C (14°F to 194°F)	NBR (nitrile)

Materials in contact with fluid

(∗) Ensure that the compatibility of the fluids in contact with the materials is verified

Body	Brass or stainless steel, AISI 316
Shading coil	Copper
Core tube	Stainless steel
Core and plugnut	Stainless steel
Springs	Stainless steel
Seal & Disc	FPM or EPDM or NBR
Seat	Brass or Stainless Steel AISI 303

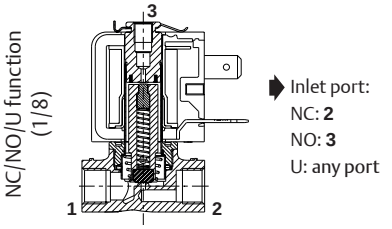

Electrical characteristics

Coil insulation class	F (H - approval pending)
Connector	Spade plug (cable Ø 6-8 mm or Ø 6-10 mm)
Connector specification	DIN 43650, 11 mm, industry standard B (type 01) or ISO 4400 / EN 175301-803, form A (type 02)
Electrical safety	IEC 335
Electrical enclosure protection	Moulded IP67 (EN 60529) with plug-connector
Standard voltages (Other voltages and frequencies on request)	DC (=) : 12 - 24V (+10% -5%) AC (~) : 24V/50-60 Hz - 110V/50 Hz (120 V/60Hz) 230V/50-60 Hz (+10% -15%)

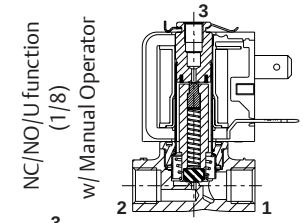

operator ambient temperature range (TS)	power ratings holding ~		hot/cold =	replacement coil ~		=	Type
°C (°F)	(VA)	(W)	(W)	120 V/60 Hz, 110 V/50 Hz	230 V /50-60 Hz	24 V DC	
-10 to +60 (14 to 140)	4.5	3	-	533534-024	533534-003	-	01
	-	-	5	-	-	533534-002	
	14	9	9	533593-020	533593-003	533593-002	02

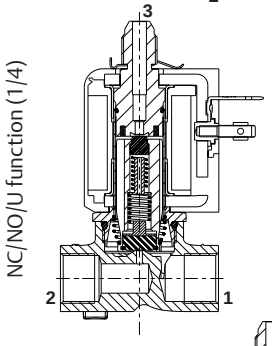

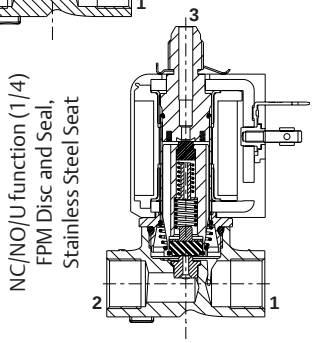

Options

- NSF 169, EC 1935 / 2004 approval, EPDM/FPM disc and seal (Food Grade)

(∗) Ensure that the compatibility of the fluids in contact with the materials is verified.

(1) The minimum ambient temperature of the solenoid valve is determined by the limitations of minimum temperature indicated.

(2) Steam only for 1/4" version with stainless steel seat or body.

01530GB-2020/R01
Availability, design and specifications are subject to change without notice. All rights reserved.

Specifications [1]

pipe size	orifice size	flow coefficient Kv		operating pressure differential bar (psi)							power coil (W)		thread type	dimensions / type [1]	15-DIGIT PRODUCT CODE								
					max. (PS)										brass	stainless steel	options		voltage code				
					air (∗)		water (∗)		oil (∗)								without manual operator	with manual operator	230 V/50-60 Hz	110 V/50 Hz (120 V / 60 Hz)	24 V/50-60 Hz	12 V/DC	24 V/DC
	mm (in)	m^3/h (Cv)	(l/min)	min.	~	=	~	=	~	=	~	=											
NC - Normally closed, FPM disc and seal																							
1/8	1.2 (3/64)	0.05 (0.06)	0.83	0	15 (218)	-	15 (218)	-	15 (218)	-	3	-	G	01	G356C134S1	G356C144S1	V00	V01	FH	F0	FQ	F3	F1
													NPT	01	8356C134S1	8356C144S1							
					-	15 (218)	-	15 (218)	-	15 (218)	-	5	G	01	G356C149S1	G356C159S1							
													NPT	01	8356C149S1	8356C159S1							
	1.6 (1/16)	0.08 (0.09)	1.33	0	10 (145)	-	10 (145)	-	10 (145)	-	3	-	G	01	G356C135S1	G356C145S1							
													NPT	01	8356C135S1	8356C145S1							
					-	10 (145)	-	10 (145)	-	10 (145)	-	5	G	01	G356C150S1	G356C160S1							
													NPT	01	8356C150S1	8356C160S1							
	2 (5/64)	0.1 (0.12)	1.67	0	6 (87)	-	6 (87)	-	6 (87)	-	3	-	G	01	G356C136S1	G356C146S1							
													NPT	01	8356C136S1	8356C146S1							
				0	-	6 (87)	-	6 (87)	-	6 (87)	-	5	G	01	G356C151S1	G356C161S1							
													NPT	01	8356C151S1	8356C161S1							
	2.4 (3/32)	0.13 (0.15)	2.17	0	4 (58)	-	4 (58)	-	4 (58)	-	3	-	G	01	G356C137S1	G356C147S1							
													NPT	01	8356C137S1	8356C147S1							
					-	4 (58)	-	4 (58)	-	4 (58)	-	5	G	01	G356C152S1	G356C162S1							
													NPT	01	8356C152S1	8356C162S1							
1/4[3]	1.6 (1/16)	0.08 (0.09)	1.33	0	13 (189)		13 (189)		13 (189)		9	9	G*	02	G356C119S1	G356C127S1	V00	-	FH	F0	FQ	F3	F1
													NPT	02	8356C119S1	8356C127S1							
	2.4 (3/32)	0.15 (0.17)	2.50	0	8 (116)		8 (116)		8 (116)		9	9	G*	02	G356C121S1	G356C129S1							
													NPT	02	8356C121S1	8356C129S1							
	3.2 (1/8)	0.3 (0.35)	5.00	0	3 (44)	5 (72)	3 (44)	5 (72)	3 (44)	5 (72)	9	9	G*	02	G356C123S1	G356C131S1							
													NPT	02	8356C123S1	8356C131S1							
	4.5 (11/64)	0.4 (0.46)	6.67	0	2.5 (36)	3 (43)	2.5 (36)	3 (43)	2.5 (36)	3 (43)	9	9	G*	02	G356C124S1	G356C132S1							
													NPT	02	8356C124S1	8356C132S1							
NO - Normally open, FPM disc and seal																							
1/8	1.6 (1/16)	0.07 (0.08)	1.17	0	8.5 (123)	-	8.5 (123)	-	8.5 (123)	-	3	-	G	01	G356C223S1	G356C235S1	V00	V01	FH	F0	FQ	F3	F1
													NPT	01	8356C223S1	8356C235S1							
					-	8.5 (123)	-	8.5 (123)	-	8.5 (123)	-	5	G	01	G356C227S1	G356C239S1							
													NPT	01	8356C227S1	8356C239S1							
1/4[3]	2.4 (3/32)	0.15 (0.17)	2.50	0	9 (130)	9 (130)	9 (130)	9 (130)	9 (130)	9 (130)	9	9	G	02	G356C214S1	G356C219S1	V00	-	FH	F0	FQ	F3	F1
													NPT	02	8356C214S1	8356C219S1							

[1] All performances are referred to Ambient Temperature = +60°C.
[2] For dimensions, see drawing(s) for each construction type on the following page(s).
[3] Steam: . EPDM Sealing PS max. 4 bar (max. temperature of fluid 140°C)
. FPM Sealing PS max. 2.8 bar (max. temperature of fluid 130°C)

(∗) Ensure that the compatibility of the fluids in contact with the materials is verified.

01530GB-2020/R01
Availability, design and specifications are subject to change without notice. All rights reserved.

Specifications [1]

pipe size	orifice size	flow coefficient Kv		operating pressure differential bar (psi)						power coil (W)		thread type	dimensions / type [2]	15-DIGIT PRODUCT CODE								
					max. (PS)											options		voltage code				
					air (∗)		water (∗)		oil (∗)													
	mm (in)	m³/h (Cv)	(l/min)	min.	~	=	~	=	~	=	~	=			brass	stainless steel	without manual operator	with manual operator	230 V/50-60 Hz	110 V/50 Hz (120 V / 60 Hz)	24 V/50-60 Hz	12 V/DC	24 V/DC
U - Universal, FPM disc and seal																							
1/8	1.2 (3/64)	0.05 (0.06)	0.83	0	7 (102)	-	7 (102)	-	7 (102)	-	3	-	G	01	**G356C312S1**	**G356C316S1**	**V00**	**V01**	**FH**	**F0**	**FQ**	**F3**	**F1**
													NPT	01	**8356C312S1**	**8356C316S1**							
					-	7 (102)	-	7 (102)	-	7 (102)	-	5	G	01	**G356C320S1**	**G356C324S1**							
													NPT	01	**8356C320S1**	**8356C324S1**							
	1.6 (1/16)	0.08 (0.09)	1.33	0	4.5 (65)	-	4.5 (65)	-	4.5 (65)	-	3	-	G	01	**G356C313S1**	**G356C317S1**							
													NPT	01	**8356C313S1**	**8356C317S1**							
					-	4.5 (65)	-	4.5 (65)	-	4.5 (65)	-	5	G	01	**G356C321S1**	**G356C325S1**							
													NPT	01	**8356C321S1**	**8356C325S1**							
	2 (5/64)	0.1 (0.12)	0.83	0	3 (44)	-	3 (44)	-	3 (44)	-	3	-	G	01	**G356C314S1**	**G356C318S1**							
													NPT	01	**8356C314S1**	**8356C318S1**							
				0	-	3 (44)	-	3 (44)	-	3 (44)	-	5	G	01	**G356C322S1**	**G356C326S1**							
													NPT	01	**8356C322S1**	**8356C326S1**							
	2.4 (3/32)	0.13 (0.15)	2.17	0	2 (29)	-	2 (29)	-	2 (29)	-	3	-	G	01	**G356C315S1**	**G356C319S1**							
													NPT	01	**8356C315S1**	**8356C319S1**							
					-	2 (29)	-	2 (29)	-	2 (29)	-	5	G	01	**G356C323S1**	**G356C327S1**							
													NPT	01	**8356C323S1**	**8356C327S1**							
1/4[3]	2.4 (3/32)	0.15 (0.17)	2.50	0	5 (72.5)	5 (73)	5 (72.5)	5 (73)	5 (72.5)	5 (73)	9	9	G	02	**G356C303S1**	**G356C309S1**	**V00**	**-**	**FH**	**F0**	**FQ**	**F3**	**F1**
													NPT	02	**8356C303S1**	**8356C309S1**							

[1] All performances are referred to Ambient Temperature = +60°C.
[2] For dimensions, see drawing(s) for each construction type on the following page(s).
[3] Steam: . EPDM Sealing PS max. 4 bar (max. temperature of fluid 140°C)
. FPM Sealing PS max. 2.8 bar (max. temperature of fluid 130°C)

(∗) Ensure that the compatibility of the fluids in contact with the materials is verified.

01530GB-2020/R01
Availability, design and specifications are subject to change without notice. All rights reserved.

Product selection guide

Configurator - CAD Files

PRODUCT CODE

G	356	C	134	S1	V00	F1

Connection Type
G = ISO 228/1 (1/8" or 1/4")
8 = NPT (SAE 71051)

Product series
356

Revision letter
C = Initial release

Valves version

Electrical interface
S1 = With spade plug connector
S0 = Without spade plug connector
L0 = Leaded coil (1/8" - 1/4", 500 mm cable length)

Voltage
F1 = 24 V DC Class F
F3 = 12 V DC Class F
FQ = 24 V / 50-60 Hz Class F
F0 = 110 V / 50 Hz (120 V / 60 Hz) Class F
FH = 230 V / 50-60 Hz Class F
ET = 220-230 V / 50 Hz 208-240 V / 60 Hz Class F (1)
H1 = 24 V DC Class H
HH = 230 V / 50-60 Hz Class H

Options

Without manual operator
E00 = EPDM Disc and Seal
V00 = FPM Disc and Seal
N00 = NBR Disc and Seal
9CK = EPDM Disc and Seal (Food Grade) + NSF + EC 1935 / 2004
9CM = FPM Disc and Seal (Food Grade) + NSF + EC 1935 / 2004
9DF = EPDM Disc and Seal (Food Grade) + Stainless Steel Seat + NSF + EC 1935 / 2004 (2)
9DH = FPM Disc and Seal (Food Grade) + Stainless Steel Seat +NFS + EC 1935 / 2004 (2)
9DP = EPDM Disc and Seal + Stainless Steel Seat (2)
9DQ = FPM Disc and Seal + Stainless Steel Seat (2)

With manual operator (3)
(With maintained manual operator)
E01 = EPDM Disc and Seal, w/ Manual Operator
V01 = FPM Disc and Seal, w/ Manual Operator
N01 = NBR Disc and Seal, w/ Manual Operator
9CE = EPDM Disc and Seal (Food Grade), w/ Manual Operator + NSF + EC 1935 / 2004
9CW = FPM Disc and Seal (Food Grade), w/ Manual Operator + NSF + EC 1935 / 2004

(1) To obtain the correct pressure rating and power absorption check the landing pages of the online configurator. Operating Voltage Range (+10% -10%).
(2) Only for 1/4" Version.
(3) Not available for 1/4" Version.

01530GB-2020/R01
Availability, design and specifications are subject to change without notice. All rights reserved.

Repair Kits and Service Parts - Spare Parts Kits

		Spare parts kits no. (✳)							
		EPDM Disc and Seal	FPM Disc and Seal	NBR Disc and Seal	-	-	-	-	-
NC - Normally closed - 1/4" - AC (~) / DC (=)									
356C119/121/123/124/127/129/131/132	**M200708**	**E00**	**V00**	**N00**	-	-	-	-	-
NO - Normally open - 1/4" - AC (~) / DC (=)									
356C214/219	**M200710**	**E00**	**V00**	**N00**	-	-	-	-	-
U - Universal - 1/4" - AC (~) / DC (=)									
356C301/303/305/307/309/311	**M200712**	**E00**	**V00**	**N00**	-	-	-	-	-

		EPDM Disc and Seal (Food Grade) + NSF + EC 1935 / 2004 + Stainless Steel Seat	FPM Disc and Seal (Food Grade) + NSF + EC 1935 / 2004 + Stainless Steel Seat	EPDM Disc and Seal (Food Grade) + NSF + EC 1935 / 2004	FPM Disc and Seal (Food Grade) + NSF + EC 1935 / 2004	EPDM Disc and Seal + Stainless Steel Seat	FPM Disc and Seal + Stainless Steel Seat
NC - Normally closed - 1/4" - AC (~) / DC (=)							
356C119/121/123/124/127/129/131/132	**M200708**	**9DF**	**9DH**	**9CK**	**9CM**	**9DP**	**9DQ**
NO - Normally open - 1/4" - AC (~) / DC (=)							
356C214/219	**M200710**	**9DF**	**9DH**	**9CK**	**9CM**	**9DP**	**9DQ**
U - Universal - 1/4" - AC (~) / DC (=)							
356C301/303/305/307/309/311	**M200712**	**9DF**	**9DH**	**9CK**	**9CM**	**9DP**	**9DQ**

01530GB-2020/R01
Availability, design and specifications are subject to change without notice. All rights reserved.

Installation

- The solenoid valves can be mounted in any position without affecting operation
- Solenoid valves have 2 mounting holes in body
- Thread connection “G” applicable for 1/8, have standard thread according to ISO 228/1
- Thread connection “8” have standard thread = NPT (SAE 71051)
- Installation/maintenance instructions are included with each valve

Dimensions mm (inches), **Weight** kg (Lbs)

Configurator - CAD Files



TYPE 01
Electrical interface “S1”
Coil size 20 mm - Thermoplactic moulded
IEC 335 / DIN 43650
IP67

NC (1/8”) - Without manual operator (V0)

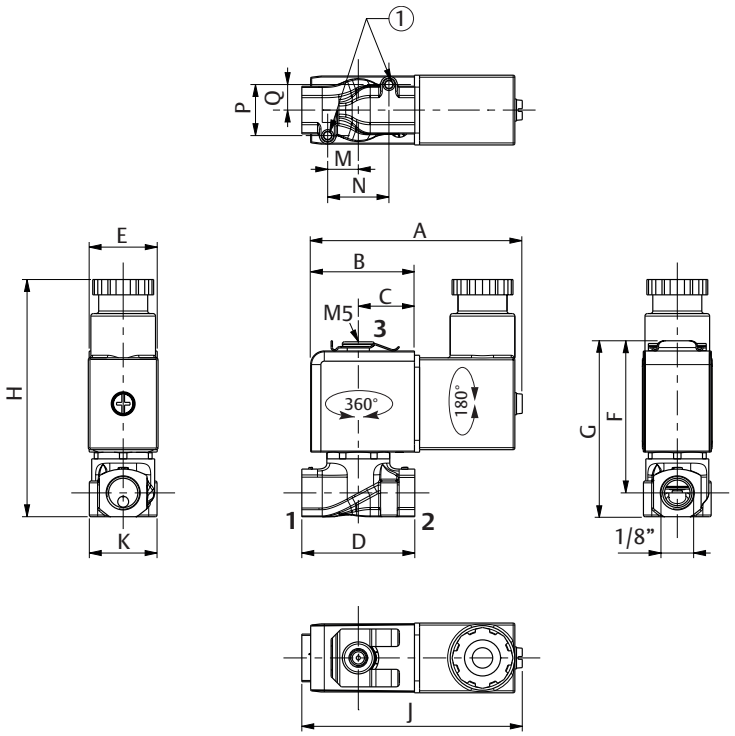

Inlet port:
NC: **2**
NO: **3**
U: any port

(1) 2 mounting holes:
M3 dia., through holes (0.12 inch dia.)

size 20		A	B	C	D	E	F	G	H	J	K	M	N	P	Q	weight (1)	
G356C134..G356C162 G356C223..G356C239 G356C312..G356C323	mm	61.9	30.5	16.5	33.2	20	44.7	51.7	69.7	64.8	19.9	9	18	15	7.5	0.155	kg
8356C134..8356C162 8356C223..8356C239 8356C312..8356C323	(in)	2.44	1.20	0.65	1.31	0.79	1.76	2.03	2.74	2.55	0.78	0.35	0.71	0.59	0.30	0.34	(Lbs)

(1) Incl. coil(s) and connector(s).

01530GB-2020/R01
Availability, design and specifications are subject to change without notice. All rights reserved.

Dimensions mm (inches), **Weight** kg (Lbs)

Configurator - CAD Files

NC (1/8") - With manual operator (V1)

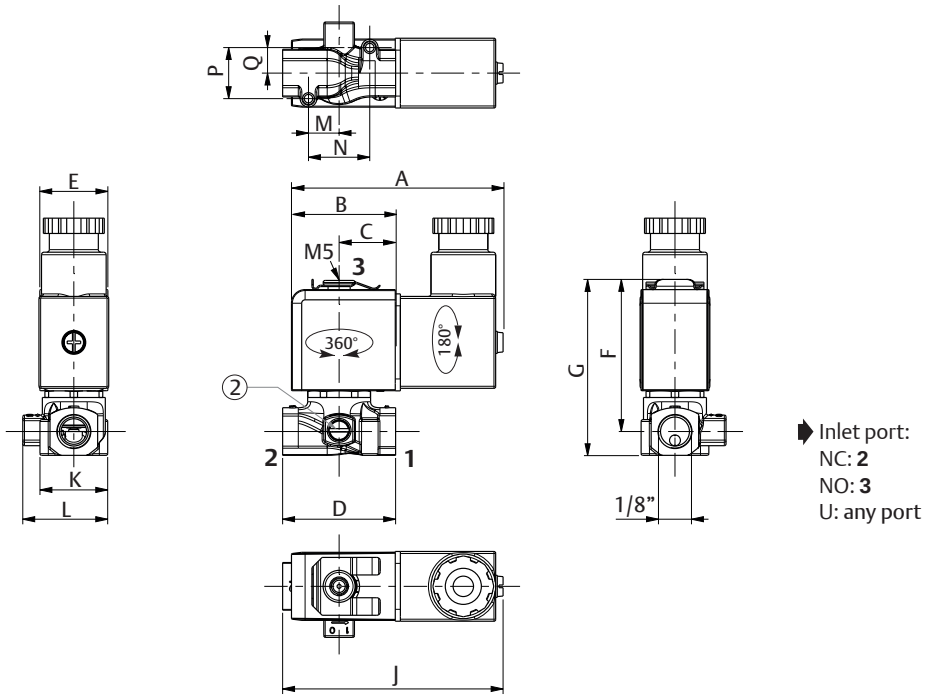

Inlet port:
NC: **2**
NO: **3**
U: any port

① 2 mounting holes:
M3 dia., through holes (0.12 inch dia.)
② Manual operator location

size 20		A	B	C	D	E	F	G	H	J	K	L	M	N	P	Q	weight (1)	
G356C134..G356C162 G356C223..G356C239 G356C312..G356C323	mm	61.9	30.5	16.5	33.2	20	44.7	51.7	69.7	64.8	19.9	24.95	9	18	15	7.5	0.155	kg
8356C134..8356C162 8356C223..8356C239 8356C312..8356C323	(in)	2.44	1.20	0.65	1.31	0.79	1.76	2.03	2.74	2.55	0.78	0.98	0.35	0.71	0.59	0.30	0.34	(Lbs)

(1) Incl. coil(s) and connector(s).

01530GB-2020/R01
Availability, design and specifications are subject to change without notice. All rights reserved.

Dimensions mm (inches), **Weight** kg (Lbs)

Configurator - CAD Files



TYPE 02
Electrical interface “S1”
Coil size 30 mm - Thermoplactic moulded
IEC 335 / ISO 4400
IP67
NC (1/4”) - Without manual operator (V0)

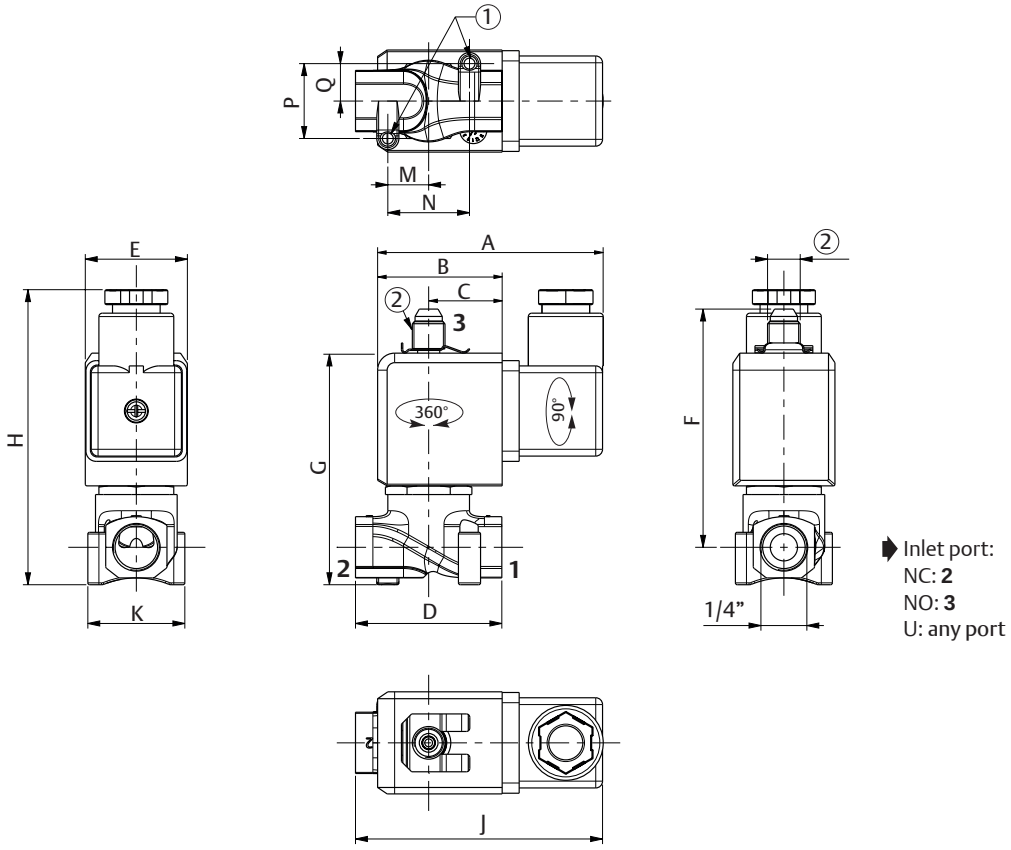

(1) 2 mounting holes:
M4 dia., through holes (0.16 inch dia.)
(2) 1/8” threaded

size 30		A	B	C	D	E	F	G	H	J	K	M	N	P	Q	weight (1)	
G356C119..G356C132 G356C214 / G356C219 G356C303 / G356C309	mm	66.3	36.6	21.6	43	30	70	81	86.7	72.6	28.5	12	24	22	11	0.3	kg
8356C119..8356C132 8356C214 / 8356C219 8356C303 / 8356C309	(in)	2.61	1.44	0.85	1.69	1.18	2.75	3.18	3.41	2.86	1.12	0.47	0.94	0.87	0.43	0.66	(Lbs)

(1) Incl. coil(s) and connector(s).

01530GB-2020/R01
Availability, design and specifications are subject to change without notice. All rights reserved.

Dimensions mm (inches), **Weight** kg (Lbs)

Configurator - CAD Files

NC (1/4") - Without manual operator (V0) - Stainless Steel Seat (9DF/9DG/9DH/9DJ/9DP/9DQ)

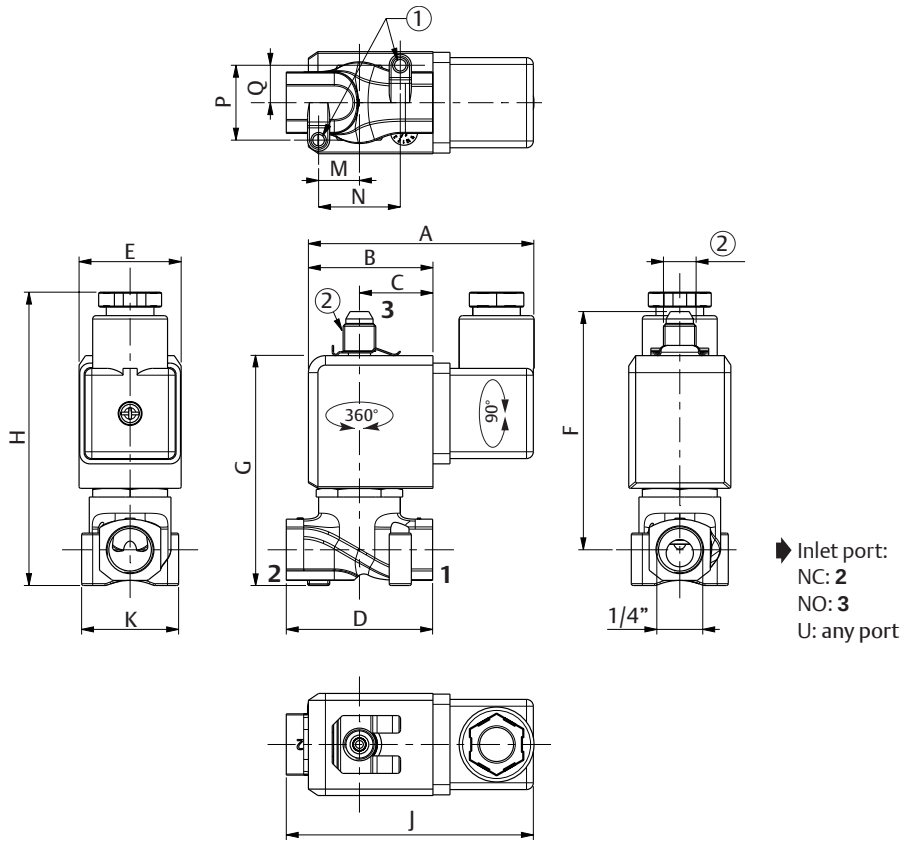

Inlet port:
NC: **2**
NO: **3**
U: any port

(1) 2 mounting holes:
M4 dia., through holes (0.16 inch dia.)
(2) 1/8" threaded

size 30		A	B	C	D	E	F	G	H	J	K	M	N	P	Q	weight (1)	
G356C119..G356C132 G356C214 / G356C219 G356C301..G356C311	mm	66.3	36.6	21.6	43	30	70	81	86.7	72.6	28.5	12	24	22	11	0.3	kg
8356C119..8356C132 8356C214 / 8356C219 8356C303 / 8356C309	(in)	2.61	1.44	0.85	1.69	1.18	2.75	3.18	3.41	2.86	1.12	0.47	0.94	0.87	0.43	0.66	(Lbs)

(1) Incl. coil(s) and connector(s).

01530GB-2020/R01
Availability, design and specifications are subject to change without notice. All rights reserved.

01530GB-2020/R01
Availability, design and specifications are subject to change without notice. All rights reserved.