Technical datasheet





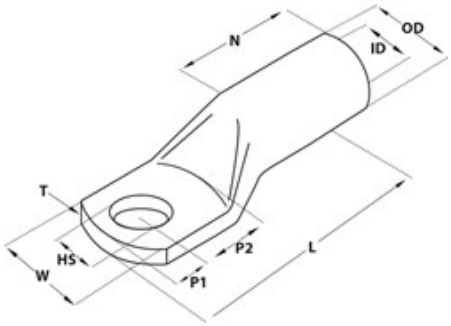

KRDIN 240-12

E0812802

Cable Lug KRDIN, 240mm2, M12

Product Properties:

Suitable for Class 2 conductor	Yes
Suitable for Class 5 conductor	Yes
Insulated	No
Number of mounting holes	1 .
Flange shape	Ring shape
Colour insulation	Other
Slender flange model	No
With sight-hole	No
Conductor category	Several
Surface protection	Tinned
Material	Copper
Connecting angle	180° (horizontal)

Dimensions:

HS	13 mm
ID	21.5 mm
OD	29 mm
T	6.8 mm
P1	15 mm
P2	14 mm
L	108 mm
N	40 mm

W	42 mm
MOQ	10 .
Unit	pcs
Bolt dimension (metric)	12 .
Nominal cross section	240 mm²

Approvals:

Approved according to CE	Yes
Approved according to UKCA	Ja

Compliance:

Conflict Minerals	Contain "Tin"
Extended Minerals	Contain "Copper"
PFAS	No PFAS
REACH	No SVHC (Latest. 05 Nov 2025)
RoHS	RoHS 3 (2015/863)
SCIP	Not Applicable

Other information:

ETIM-Class	EC001051 - Tube cable lug for copper conductors
ETIM-Release	9.0
Trademark	NEMIQ
Product Group	Cable lugs
Search Description	SKH2023ERIK2, ENR2025V, NYB04
Alternative SKU	KRDIN240-12
E-no	E0812802

Logistic information:

Barcode	733117641269
Country of origin	CN
E-no	E0812802
Item status	Stock item, normally in stock with reservation for in between sales.
MOQ	10 .
Stock code	KRDIN 240-12
Taric code	85369010
Unit	pcs

*We reserve the right to make technical changes and disclaim any typographical errors.