StarTech.com

Hard-to-find made easy®

Adjustable 4 Post Open Frame Server Rack



Actual product may vary from photos

User Manual

SKU#: 4POSTRACKxU

For the latest information and specifications visit
www.startech.com/4POSTRACKxU

Manual Revision: 01/25/2021

Compliance Statements

Use of Trademarks, Registered Trademarks, and other Protected Names and Symbols

This manual may make reference to trademarks, registered trademarks, and other protected names and/or symbols of third-party companies not related in any way to StarTech.com. Where they occur these references are for illustrative purposes only and do not represent an endorsement of a product or service by StarTech.com, or an endorsement of the product(s) to which this manual applies by the third-party company in question. Regardless of any direct acknowledgement elsewhere in the body of this document, StarTech.com hereby acknowledges that all trademarks, registered trademarks, service marks, and other protected names and/or symbols contained in this manual and related documents are the property of their respective holders.

PHILLIPS® is a registered trademark of Phillips Screw Company in the United States or other countries.

Warning Statements

- Make sure that you assemble this product according to the instructions.
- Do not exceed the weight capacity of this product. Overloading this product might result in injury or property damage. This product can support the following weight: Stationary = 1200 lb. (544 kg) Rolling = 660 lb. (300 kg).
- This product is intended for indoor use only and should not be used outdoors.
- This enclosure is extremely heavy. Never attempt to move or lift this enclosure without assistance.
- Tipping hazard! Extending multiple components from this enclosure increases the chance that the enclosure will tip over. To avoid this risk, do not extend more than one component from the enclosure.
- Do not place any items on this enclosure and do not stack the enclosure on top of another enclosure.
- Keep liquid away from this enclosure.
- Make sure that you install the enclosure in an area that can handle the combined weight of the enclosure and the equipment that you intend to place inside of the enclosure.
- This product requires an earth ground connection. Do not use this product without an earth ground connection.

Varningar

- Se till att du monterar produkten i enlighet med instruktionerna.
- Överskrid inte produktens vikt kapacitet. Överbelastning av denna produkt kan leda till skador eller skador på egendom. Denna produkt kan stödja följande vikt: stationär: 544 kg rullande: 300 kg.
- Produkten är endast avsedd för användning inomhus och ska inte användas utomhus.
- Detta skåp är extremt tungt. Försök aldrig flytta på skåpet eller lyfta det utan hjälp.
- Risk för vältning! Att förlänga flera komponenter från detta skåp ökar risken för att det välter. Förläng inte fler än en komponent från skåpet för att undvika risk.
- Placera inte saker ovanpå skåpet och ställ inte skåpet ovanpå ett annat skåp.
- Håll vätskor borta från skåpet.
- Se till att du installerar skåpet på en plats som kan hantera den kombinerade vikten av skåpet och utrustningen som du tänker placera inuti.

- Produkten behöver en jordad anslutning. Använd inte produkten utan en jordad anslutning.

Avertissements

- Assemblez ce produit conformément aux instructions.
- Ne dépassez pas la capacité pondérale de ce produit. Une surcharge de ce produit peut entraîner des dommages corporels ou matériels. Ce produit peut supporter le poids suivant, stationnaire = 544 kg, roulant = 300 kg.
- Ce produit est uniquement destiné à une utilisation en intérieur et ne doit pas être utilisé à l'extérieur.
- Ce rack de serveur est extrêmement lourd. Ne tentez jamais de le déplacer ou de le soulever sans aide.
- Risque de basculement ! L'extension de plusieurs composants à partir du rack de serveur augmente le risque de basculement. Pour éviter ce risque, n'étendez pas plus d'un composant à partir du rack de serveur.
- Ne placez aucun objet sur ce rack de serveur et n'empilez pas le rack sur un autre rack.
- N'approchez aucun liquide du rack de serveur.
- Veillez à installer le rack de serveur dans un endroit pouvant supporter le poids combiné du rack et des équipements que vous comptez placer à l'intérieur.
- Ce produit nécessite un raccordement à la terre. N'utilisez pas ce produit sans raccordement à la terre.

Warnhinweise

- Beachten Sie bei der Montage dieses Produkts die Montageanweisungen.
- Überschreiten Sie nicht die Tragfähigkeit dieses Produkts. Das Überladen dieses Produkts kann zu Verletzungen oder Sachschäden führen. Dieses Produkt kann das folgende Gewicht tragen: Stationär = 544 kg, rollend = 300 kg.
- Dieses Produkt ist nur zum Gebrauch in Innenräumen vorgesehen und sollte nicht im Freien verwendet werden.
- Dieses Gehäuse ist extrem schwer. Versuchen Sie niemals, dieses Gehäuse ohne Hilfe zu bewegen oder anzuheben.
- Kippgefahr! Das Ausziehen mehrerer Komponenten aus diesem Gehäuse erhöht die Chance, dass das Gehäuse umkippt. Um dies zu vermeiden, ziehen Sie niemals mehr als eine Komponente aus diesem Gehäuse aus.
- Platzieren Sie keine Gegenstände auf dem Gehäuse und stapeln Sie das

Gehäuse nicht auf einem anderen Gehäuse.
- Halten Sie Flüssigkeiten von diesem Gehäuse fern.
- Vergewissern Sie sich, dass der Untergrund, auf dem das Gehäuse aufgestellt wird, in der Lage ist, das Gesamtgewicht des Gehäuses und der Geräte, die Sie darin platzieren möchten, zu tragen.
- Dieses Produkt erfordert einen Schutzleiteranschluss. Verwenden Sie das Produkt nicht ohne einen Schutzleiteranschluss.

Dichiarazioni di avvertenza

- Assicurarsi di Assemblare il prodotto secondo le istruzioni.
- Non superare la capacità di carico massimo di questo prodotto onde evitare danni o lesioni alla proprietà. Questo prodotto e' in grado di supportare il peso riportato, Statico = 544 kg, Dinamico = 300 kg.
- Il prodotto è destinato all'uso in ambienti interni. Se ne sconsiglia l'impiego in ambienti esterni.
- Il box esterno è molto pesante. Non tentare di spostarlo o sollevarlo senza assistenza.
- Pericolo di ribaltamento! L'estensione di più componenti dal box esterno aumenta il rischio di ribaltamento del box esterno. Per evitare questo rischio, non estendere più di un componente dal box esterno.
- Non collocare oggetti sul box esterno e non impilare un box esterno sopra un altro.
- Tenere il box esterno lontano dai liquidi.
- Assicurarsi di installarlo in un punto che possa sorreggere il peso combinato del box esterno e dell'apparecchiatura che si intende collocare al suo interno.
- Il prodotto richiede una messa a terra. Non utilizzare il prodotto in assenza di una messa a terra.

Mensagens de aviso

- Certifique-se de que monta este produto de acordo com as instruções.
- Não exceda a capacidade de peso deste produto. Sobrecarregar este produto pode resultar em ferimentos ou danos à propriedade. Este produto pode suportar o seguinte peso: estacionário: 544 kg. Rolando: 300 kg.
- Este produto destina-se apenas a uma utilização no interior e não deve ser utilizado no exterior.
- Esta caixa é extremamente resistente. Nunca tente mover ou levantar esta caixa sem assistência.
- Perigo de queda! Estender vários componentes desta caixa aumenta a

probabilidade desta caixa cair. Para evitar este risco, não expandir mais de um componente desta caixa.
- Não colocar nenhum artigo nesta caixa e não empilhar a caixa em cima de outra caixa.
- Manter líquidos afastados desta caixa.
- Certifique-se de que instala a caixa numa área que pode suportar o peso combinado da caixa e o equipamento que pretende colocar dentro da caixa.
- Este produto requer uma ligação à terra. Não utilize este produto sem uma ligação à terra.

Advertencias de uso

- Asegúrese de ensamblar este producto según las instrucciones.
- No exceda la capacidad de carga de este producto. El sobrecargarlo puede ocasionar lesiones y daños en propiedad. Este producto puede soportar el siguiente peso, Estacionario = 544 kg Rodante = 300 kg.
- El uso de este producto es solo para interiores y no debe utilizarse en exteriores.
- La caja es extremadamente pesada. Nunca intente mover o alzar esta caja sin la debida asistencia de otra persona.
- ¡Peligro de vuelco! Añadir a esta caja varios componentes aumenta las posibilidades de peligro de vuelco de la caja. Para evitar dicho riesgo, no añada más que un solo componente.
- No coloque ningún elemento encima de la caja y no apile la caja encima de otra caja.
- Mantenga cualquier líquido lejos de la caja.
- Asegúrese de instalar la caja en un área que tenga capacidad para soportar el peso combinado de la caja y el equipo que va a instalar dentro de la misma.
- Este producto requiere conexión a tierra. No utilice este producto sin conexión a tierra.

Waarschuwingen

- Zorg dat u dit product volgens de instructies in elkaar zet.
- Overschrijd de maximale capaciteit van dit product niet. Overbelasting De maximale gewichtscapaciteit mag niet overschreden worden. Overbelasting kan kan letsel of schade tot gevolg hebben. Dit product kan het volgende gewicht ondersteunen, stationair = 544 kg. rollend = 300 kg.
- Dit product is alleen bedoeld voor binnengebruik en mag niet buiten worden gebruikt.

- Deze behuizing is enorm zwaar. Probeer nooit deze behuizing te verplaatsen of op te tillen zonder hulp.
- Kantelgevaar! Wanneer meerdere componenten uit deze behuizing steken, bestaat de kans dat deze zal kantelen. Om dit risico te voorkomen, mag niet meer dan één component uit de behuizing steken.
- Plaats geen voorwerpen op deze behuizing en stapel de behuizing niet op een andere behuizing.
- Houd vloeistof uit de buurt van deze behuizing.
- Zorg dat u de behuizing installeert op een plaats die geschikt is voor het gecombineerde gewicht van de behuizing en de apparatuur die u in de behuizing wilt plaatsen.
- Dit product vereist een geaarde verbinding. Gebruik dit product niet zonder een geaarde verbinding.

注意

- 必ず取扱説明書に従って本製品の組み立てを行って下さい。
- 本製品で定められた可搬重量を超えないようにして下さい。規定された重量を超えた場合、怪我や物的損害が発生することがあります。本製品は次の可搬重量に対応しています。[キャスター静止時] =544 kg、[キャスター動作時] = 300 kg
- 本製品は、室内での使用を想定しています。戸外では使用しないで下さい。
- 本製品は、非常に重いエンクロージャです。絶対に一人で持ち上げたり動かしたりしないで下さい。
- 転倒注意!本製品から複数のコンポーネントが突き出した状態にしておくとエンクロージャが転倒する恐れがあります。転倒リスクを回避するために、エンクロージャからはコンポーネントが突き出ないようにして下さい。
- 本製品の上に何も載せないで下さい。複数のエンクロージャを重ねて設置しないで下さい。
- 液体物をエンクロージャに近づけないようにして下さい。
- エンクロージャ自身と中に積載する装置の総重量に耐えられるエリアに設置して下さい。
- この製品にはアースが必要です。アース接続をしていない状態で本製品を使用しないでください。

StarTech.com
Hard-to-find made easy®

Table of Contents

Compliance Statements i

Warning Statements ii

Product Diagram 1

Expanded View 1

Package Contents 2

Requirements 7

Installation 7

Set the Mounting Depth 7

Assemble the Rack 9

Install the Leveling Feet 13

Install the Casters 13

Install the Cable Management Hooks 14

Ground the Rack 15

Operation 16

Adjust the Leveling Feet 16

Warranty Information 17

StarTech.com
Hard-to-find made easy®

Product Diagram

Expanded View

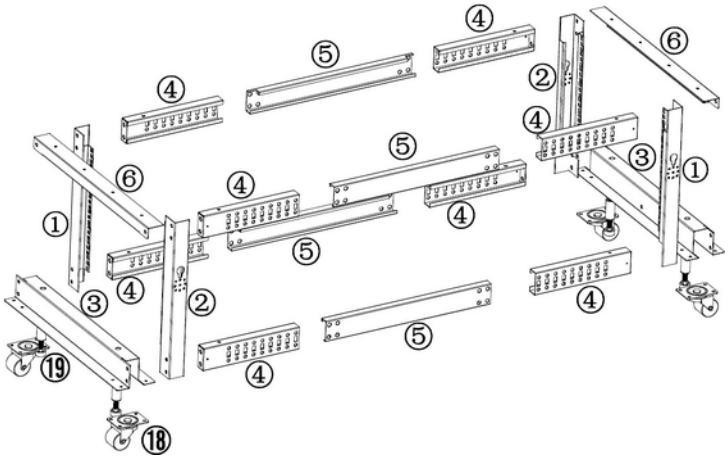

1	Left Vertical Rails (x 2)	5	Center Sections (x 4)
2	Right Vertical Rails (x 2)	6	Top Brackets (x 2)
3	Base Brackets (x 2)	18	Casters (x 4)
4	Corner Sections (x 8)	19	Leveling Feet (x 4)

To view manuals, videos, drivers, downloads, technical drawings, and more visit www.startech.com/support

Package Contents

 Left Vertical Rail Qty: 2	 Right Vertical Rail Qty: 2
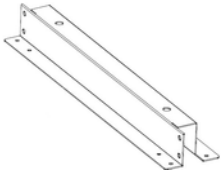 Base Bracket Qty: 2	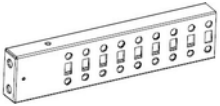 Corner Section Qty: 8

 Center Section Qty: 4	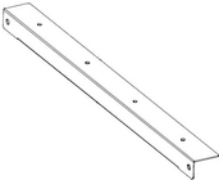 Top Bracket Qty: 2
 M8 Bolt Qty: 50	 M8 Washer Qty: 50
 10 mm Wrench Qty: 1	 13 mm Wrench Qty: 1

 Phillips Head Screwdriver Qty: 1	 M6 Cage Nuts 8U/12U/15U/18U Qty: 24 25U Qty: 32 42U Qty: 50
 M6 Plastic Washers 8U/12U/15U/18U Qty: 24 25U Qty: 32 42U Qty: 50	 M6 Phillips Head Screw 8U/12U/15U/18U Qty: 24 25U Qty: 32 42U Qty: 50
 Cable Management Hooks 8U/12U Qty: 4 15U/18U Qty: 8 25U Qty: 12 42U Qty: 24	 Hook Mounting Screws 8U/12U Qty: 4 15U/18U Qty: 8 25U Qty: 12 42U Qty: 24

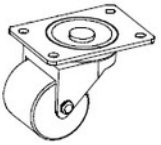 Casters Qty: 4	 Leveling Feet Qty: 4
 M6 Screws Qty: 18	 M6 Flange Nut Qty: 18
 M6 Flange Nut Qty: 18	 Grounding Wires Qty: 4

 M6 Grounding Wire Bolts Qty: 4	 M6 Grounding Wire Lock Washers Qty: 4

Requirements

For the latest requirements please visit www.startech.com/4POSTRACKxxU.

- Pliers (sold separately)
- 14 mm Wrench (sold separately)
- Two People (for assembly)
- Earth Ground Connection
- (Optional) Spirit/Bubble Level (sold separately)

Installation

Note: *Two people are required for the Rack assembly.*

Set the Mounting Depth

1. Align the **Corner Sections** (x 2) with the **Center Sections** (x1) and slide the **Corner Sections** overtop of the **Center Sections**. *(Figure 1)*



Figure 1

2. Determine the maximum required mounting depth for the **Rack Mountable Equipment**. Review the **Mounting Depth Chart** to determine the **Setting Numbers** that are required for the application.

Mounting Depth Chart

Mounting Depth	Setting Numbers
22 in.	0 and 0
23 in.	1 and 0
24 in.	1 and 1
25 in.	1 and 2
26 in.	2 and 2
27 in.	2 and 3
28 in.	3 and 3
29 in.	3 and 4
30 in.	4 and 4
31 in.	4 and 5

Mounting Depth	Setting Numbers
32 in.	5 and 5
33 in.	5 and 6
34 in.	6 and 6
35 in.	6 and 7
36 in.	7 and 7
37 in.	7 and 8
38 in.	8 and 8
39 in.	8 and 9
40 in.	9 and 9

3. Slide the **Corner Sections** (x 2), inward along the **Center Sections** (x1), and align the **Setting Numbers** on the **Center Sections** with the first **Rectangular Cutout** on the **Corner Sections** (x 2). *(Figure 2)*



Figure 2

4. Insert eight **M8 Bolts** through eight **M8 Washers** and into the holes in the **Corner Sections** (x2) and **Center Sections**. *(Figure 3)*



Figure 3

5. Tighten the **M8 Bolts** on the **Centre Section Assembly** using the **13 mm Wrench**.

Assemble the Rack

1. Place one **Left Vertical Rail** and **Right Vertical Rail** on the ground so that they are parallel to one another.

   Note: *The rack height numbers should be facing outwards and up.*

2. Insert one **Center Section Assembly** between the bottom of the **Left Vertical Rail** and the **Right Vertical Rail**. Ensure the holes in the ends of the **Center Section Assembly** align with the holes in the bottom of the **Left Vertical Rail** and the **Right Vertical Rail**.

   Note: *The* ***Setting Numbers*** *on the* ***Center Section Assembly*** *should be facing the ground.*

3. Lift a **Base Bracket** so that it is vertical and align the two holes in the side with the two holes in the **Vertical Rail** and **Center Section Assembly.**

4. Insert two **M8 Bolts** through two **M8 Washers** and into the holes in the **Base Bracket**, **Vertical Rails**, and the **Center Section Assembly**. Repeat for the other side of the **Base Bracket**. *(Figure 4)*

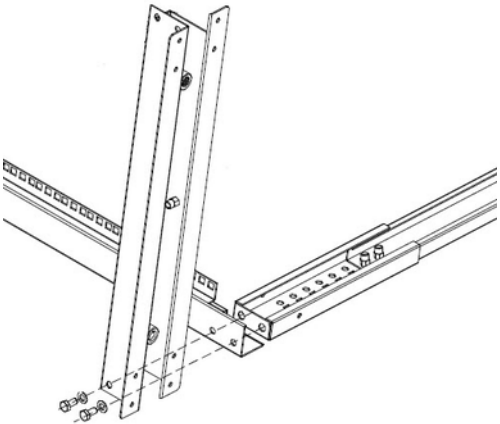

Figure 4

5. Tighten the **M8 Bolts** using the **13 mm Wrench**.
6. Repeat steps 3 to 5 to install the second **Base Bracket.**
7. Lift the current assembly of parts upright.

8. Slide a second **Center Section Assembly** between the other side of the **Base Brackets**. *(Figure 5)*

   ***Note:** The **Setting Numbers** on the **Center Section Assembly** should be facing the outside of the **Rack**.*

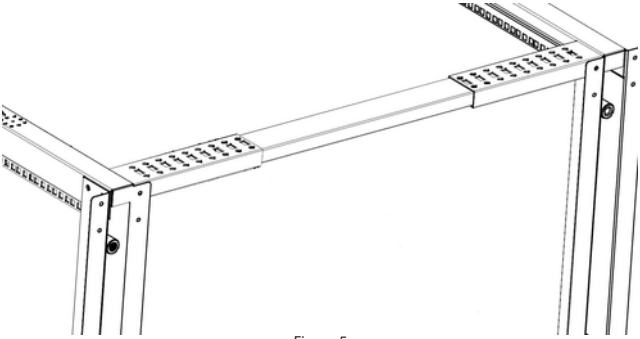

Figure 5

9. Slide the **Left Vertical Rail** between the **Base Bracket** and the **Center Section Assembly.**

   Note: The rack height numbers on the **Left Vertical Rail** should be facing upright.

10. Insert two **M8 Bolts** through two **M8 Washers** and into the holes in the **Base Bracket** that align with the **Vertical Rails** and the **Center Section Assembly.**

11. Tighten the **M8 Bolts** using the **13 mm Wrench**.

12. Repeat steps 9 to 11 to install the **Right Vertical Rail**.

13. Slide a **Center Section Assembly** between the top of the **Vertical Rails** on the left-hand side of the **Rack**.

14. Slide a **Center Section Assembly** between the top of the **Vertical Rails** on the right-hand side of the **Rack**.

15. Place one **Top Bracket** on the top front side of the **Rack**. *(Figure 6)*

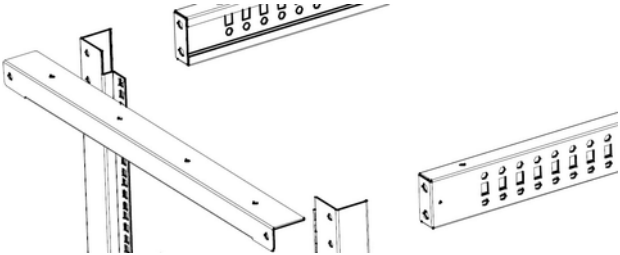

Figure 6

16. Place a second **Top Bracket** on the top rear side of the **Rack**.

17. Insert eight **M8 Bolts** through eight **M8 Washers** and into the holes in the **Top Brackets** and the tops of the **Vertical Rails**. *(Figure 7)*

18. Tighten the **M8 Bolts** using the **13 mm Wrench**.

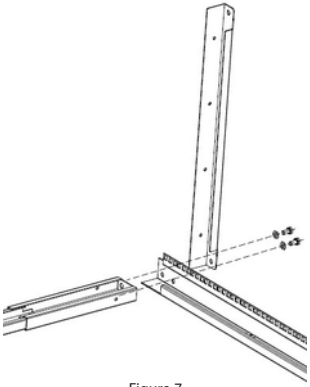

Figure 7

Install the Leveling Feet

Note: *Flip the* ***Rack*** *onto its side to complete this step.*

1. Insert the four Leveling Feet into the four holes located in the bottom of each **Base Bracket.**
2. Tighten each one of the **Leveling Feet** by hand, or with a **14 mm Wrench**. *(Figure 8)*

Install the Casters

Notes: *Flip the* ***Rack*** *onto its side to complete this step.*

Two people may be required to complete this step.

1. Align the four holes in a **Caster** with the four holes in the bottom of the **Rack**.

2. Insert four **M6 Screws** through four **M6 Flat Washers** and down through the holes in the **Rack**
3. Thread four **M6 Flange Nuts** onto the **M6 Screws**. *(Figure 8)*

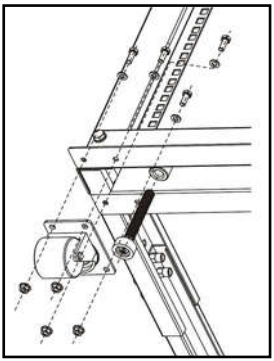

Figure 8

4. Hold the **M6 Screws** with the **Pliers** and tighten the **M6 Flange Nuts** with the **10 mm Wrench**.

   ***Note:** The **M6 Screws** will freely rotate if they are not held to prevent rotation.*

5. Repeat steps 1 to 4 to install the three remaining **Casters**.

Install the Cable Management Hooks

1. Align the **Cable Management Hooks** with the **Cable Mounting Screw Holes** along the back of the **Rack**.
2. Insert a **Hook Mounting Screw** though the **Rack** and into the **Cable Management Hook**. (Figure 9)

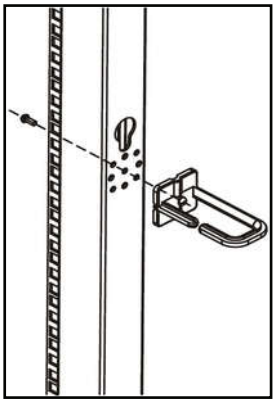

Figure 9

3. Using the **Phillips Head Screwdriver**, tighten the **Hook Mounting Screw,** being careful not to over-tighten.
4. Repeat steps 1 to 3 to install the remaining **Cable Management Hooks**.

Ground the Rack

1. Insert an **M6 Screw** through the **Grounding Point** on the **Grounding Wire** and into the **Ground Hole** located on the bottom of the **Rack**. *(Figure 10)*
2. Run the **Grounding Wire** under the **Rack's Frame**.
3. Connect the **Grounding Wire** to an **Earth Ground Connection**.

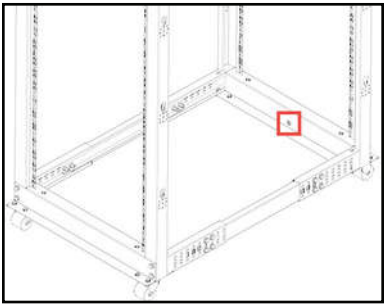

Figure 10

Operation

Adjust the Leveling Feet

Unscrew the **Levelling Feet** by hand and with a **14 mm Wrench**, until all four **Levelling Feet** are set to the same height and pressed firmly against the floor.

Note: *Use a* ***Spirit/Bubble Level*** *to ensure the* ***Rack*** *is level.*

Warranty Information

This product is backed by a two-year warranty.

For further information on product warranty terms and conditions, please refer to www.startech.com/warranty.

Limitation of Liability

In no event shall the liability of StarTech.com Ltd. and StarTech.com USA LLP (or their officers, directors, employees or agents) for any damages (whether direct or indirect, special, punitive, incidental, consequential, or otherwise), loss of profits, loss of business, or any pecuniary loss, arising out of or related to the use of the product exceed the actual price paid for the product.

Some states do not allow the exclusion or limitation of incidental or consequential damages. If such laws apply, the limitations or exclusions contained in this statement may not apply to you.

StarTech.com
Hard-to-find made easy®

Hard-to-find made easy. At StarTech.com, that isn't a slogan. It's a promise.

StarTech.com is your one-stop source for every connectivity part you need. From the latest technology to legacy products — and all the parts that bridge the old and new — we can help you find the parts that connect your solutions.

We make it easy to locate the parts, and we quickly deliver them wherever they need to go. Just talk to one of our tech advisors or visit our website. You'll be connected to the products you need in no time.

Visit www.startech.com for complete information on all StarTech.com products and to access exclusive resources and time-saving tools.

StarTech.com is an ISO 9001 Registered manufacturer of connectivity and technology parts. StarTech.com was founded in 1985 and has operations in the United States, Canada, the United Kingdom and Taiwan servicing a worldwide market.

Reviews

Share your experiences using StarTech.com products, including product applications and setup, what you love about the products, and areas for improvement.

StarTech.com Ltd.
45 Artisans Cres.
London, Ontario
N5V 5E9
Canada

StarTech.com LLP
2500 Creekside Pkwy.
Lockbourne, Ohio
43137
U.S.A.

StarTech.com Ltd.
Unit B, Pinnacle
15 Gowerton Rd., Brackmills
Northampton
NN4 7BW
United Kingdom

FR: startech.com/fr
DE: startech.com/de
ES: startech.com/es
NL: startech.com/nl
IT: startech.com/it
JP: startech.com/jp