E30153

Welding adapter for process sensors

ADAPT M12-WELDING SHOULDER ACCESSORY

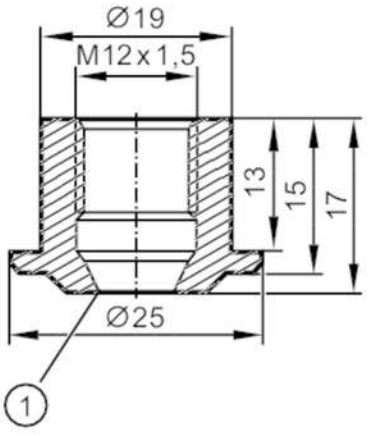

1 sealing edge

EC 1935/2004 FDA

Application		
Medium temperature	[°C]	< 250
Pressure rating	[bar]	50
Tests / approvals		
Pressure Equipment Directive		A possible classification to PED depends on the application and has to be carried out by the user / operator.
Pressure Equipment Directive EAC		The adapter is intended for use in devices, machines and installations that do not fall under the categories of the technical rule TR CU 032/2013.
Safety instructions		The compatibility between medium and product material has to be checked in all applications.
Mechanical data		
Weight	[g]	36.2
Materials		stainless steel (1.4404 / 316L)
Tightening torque	[Nm]	5...20
Sensor connection		M12 x 1,5 sealing cone
Process connection		welding adapter Ø 25 mm
Remarks		
Pack quantity		1 pcs.