# Signal lamp with integrated filament lamp, 10 mm, square bezel, 28 Volt, bezel green, Flat quick-connect terminal 2.8 x 0.8 tin-plated



### fields of application

- Measurement-control-regulation
- Electrical engineering
- Mechanical and system engineering
- Signalling systems
- Model construction

### special features

- Three shapes: round, square or arrow-shaped
- Integrated luminous element
- Filament lamp, 28 V, color: yellow
- Neon lamp, 230 V, color: red
- Luminous element neon lamp, 230 V, color: green or blue

## description

Signal lamps with integrated filament lamp, neon lamp or luminous element neon lamp, mounting hole diameter 10 mm

## technical data

| | |
|---|---|
| **general** | |
| Bezel color | green |
| Property of bezel / mushroom | transparent |
| Bezel shape | square |
| illuminated | Yes |
| Packaging unit | 10 pcs. |
| net weight | 2.4 g |
| Degree of protection, front side, according to DIN EN 60529 | IP40 |
| MOQ order | 50 pcs. |
| RoHS compliant | Yes |
| REACH compliant | Yes |
| **mounting diameters** | |
| Mounting hole | 10 mm |
| Mounting depth | 30 mm |
| Installation height | 3 mm |
| **mechanical data** | |
| Fixing | Pushing into mounting hole |
| Solderability | Yes |
| Terminal on the rear | Flat quick-connect terminal 2.8 x 0.8 tin-plated |
| **electrical data** | |
| Operating voltage of the luminous element, max. | 28 V |

### direct links

- RAFI eCatalog

The information in this data sheet only contains general descriptions and / or performance features, which may not apply precisely as described to the respective application, and which my change due to further product enhancements. The technical data, illustrations and other information about our products are the mere results of individual technical testing. These descriptions and other product features are only binding if they expressly agreed upon at the time of the conclusion of a binding contract. In all other cases, we reserve the right to make technical changes as well as changes of availability. Pictures and other graphic illustrations are approximations only. All product names may be trademarks or brand names of the RAFI Group or any other sub-supplier of RAFI. The use of such by any third parties for their own purposes may infringe the rights of the respective entity holding those rights.


**RAFI GmbH & Co. KG**

Ravensburger Str. 128-134
88276 Berg / Ravensburg
Germany
www.rafi-group.com,
info.headquarters@rafi-group.com

## drawings

### Dimensioned drawing

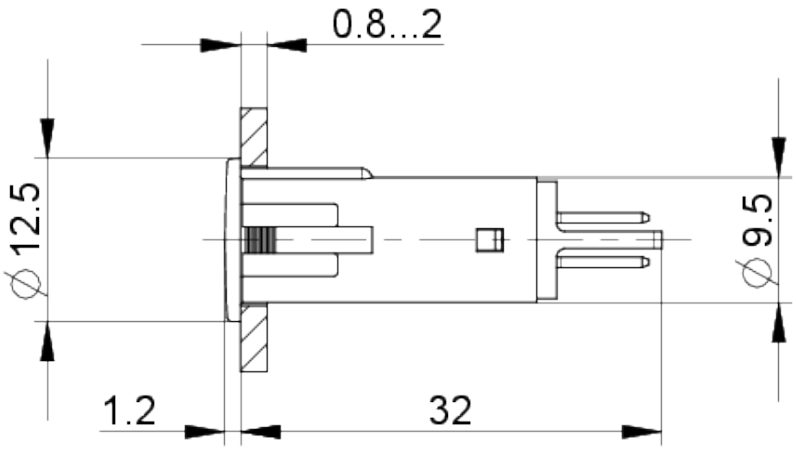


### Mounting hole drawing

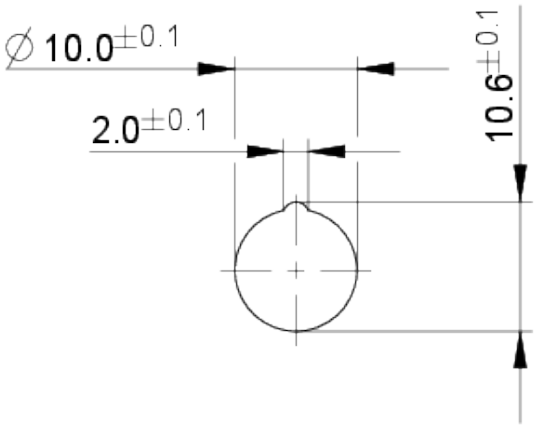


The information in this data sheet only contains general descriptions and / or performance features, which may not apply precisely as described to the respective application, and which my change due to further product enhancements. The technical data, illustrations and other information about our products are the mere results of individual technical testing. These descriptions and other product features are only binding if they expressly agreed upon at the time of the conclusion of a binding contract. In all other cases, we reserve the right to make technical changes as well as changes of availability. Pictures and other graphic illustrations are approximations only. All product names may be trademarks or brand names of the RAFI Group or any other sub-supplier of RAFI. The use of such by any third parties for their own purposes may infringe the rights of the respective entity holding those rights.


**RAFI GmbH & Co. KG**

Ravensburger Str. 128-134
88276 Berg / Ravensburg
Germany
www.rafi-group.com,
info.headquarters@rafi-group.com