multimec® 3F+1GA/1GC



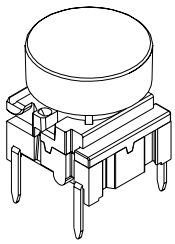

Technical Data:

- through-hole or SMD
- 50mA/24VDC
- single pole/momentary
- 10.000.000 operations life time
- IP67 sealing
- temperature range:
  low temp: -40/+115ºC
  high temp: -40/+160ºC

Dimensions (through-hole)

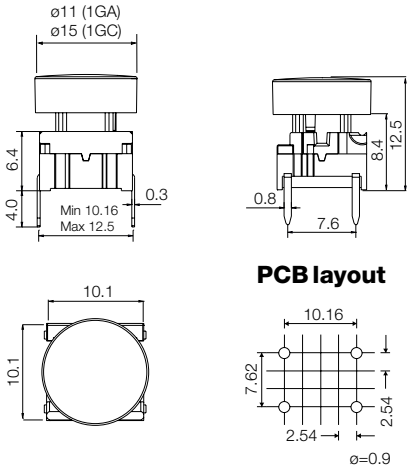

Dimensions (w/extender)

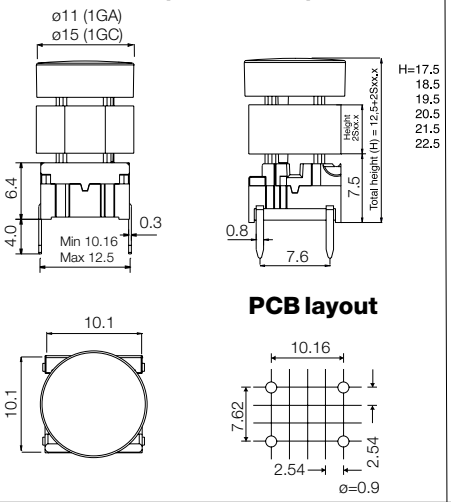

Dimensions (SMD)

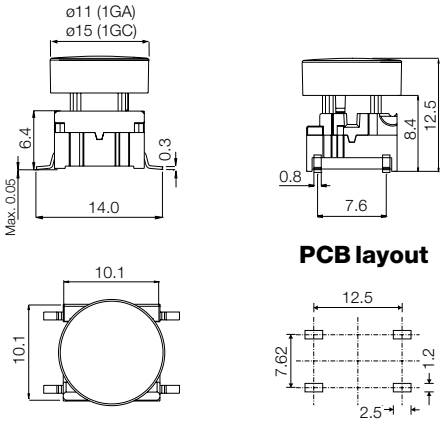

HOW TO ORDER

3 F	☐	☐☐	+	1 G A 0 9	+	2 S 0 9 - ☐☐ . 0

Switch

Mounting
T through-hole
S surface mount

L 6 low temp.
H 9 high temp.

Standard versions:
3FTL6, 3FTH9, 3FSH9, 3FSH9R

Cap black



1 G C 0 9

Cap black



Extender black Height

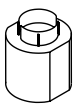

05.0 (Optional)
06.0 Adds 5-10mm
07.0 to total height.
08.0
09.0
10.0

Keycap	Variable Extender	H (height) mm	Example
1GA/1GC		12.5	H (1)
1GA/1GC	2S09-05.0	17.5	H (2)
	2S09-06.0	18.5	
	2S09-07.0	19.5	
	2S09-08.0	20.5	
	2S09-09.0	21.5	
	2S09-10.0	22.5	H (3)

H = Building height

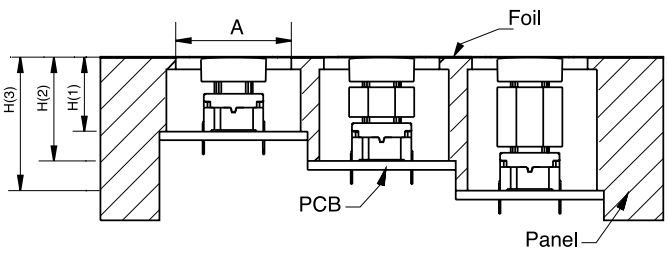

Building heights below 12.5 mm - Please see Multimec versions 3C and 3E.
All 2S09 extenders are stackable giving the possibility to match most building heights.

A = We recommend you to allocate enough space for travel of the foil and leave the area free from adhesive.
Switch travel alone = 1mm.
H = We recommend you to calculate this dimension from the top of the PCB to the inner top of the panel.

Dimensions (mm)
Unless otherwise specified,
all tolerances ±0.2

Ordering example: 3FTL6 +1GA09 or 3FTL6 + 2S09 -07.0 + 1GC09

mec a/s jan. 2003

mec · Industriparken 23 · P.o. Box 26 · DK-2750 Ballerup · Denmark
Tel.: +45 44 97 33 66 · Fax: +45 44 68 15 14 · Web: www.mec.dk · E-mail: danmec@mec.dk