OO5005

Fibre-optic amplifier

OOF-FPKG/M12/GL4

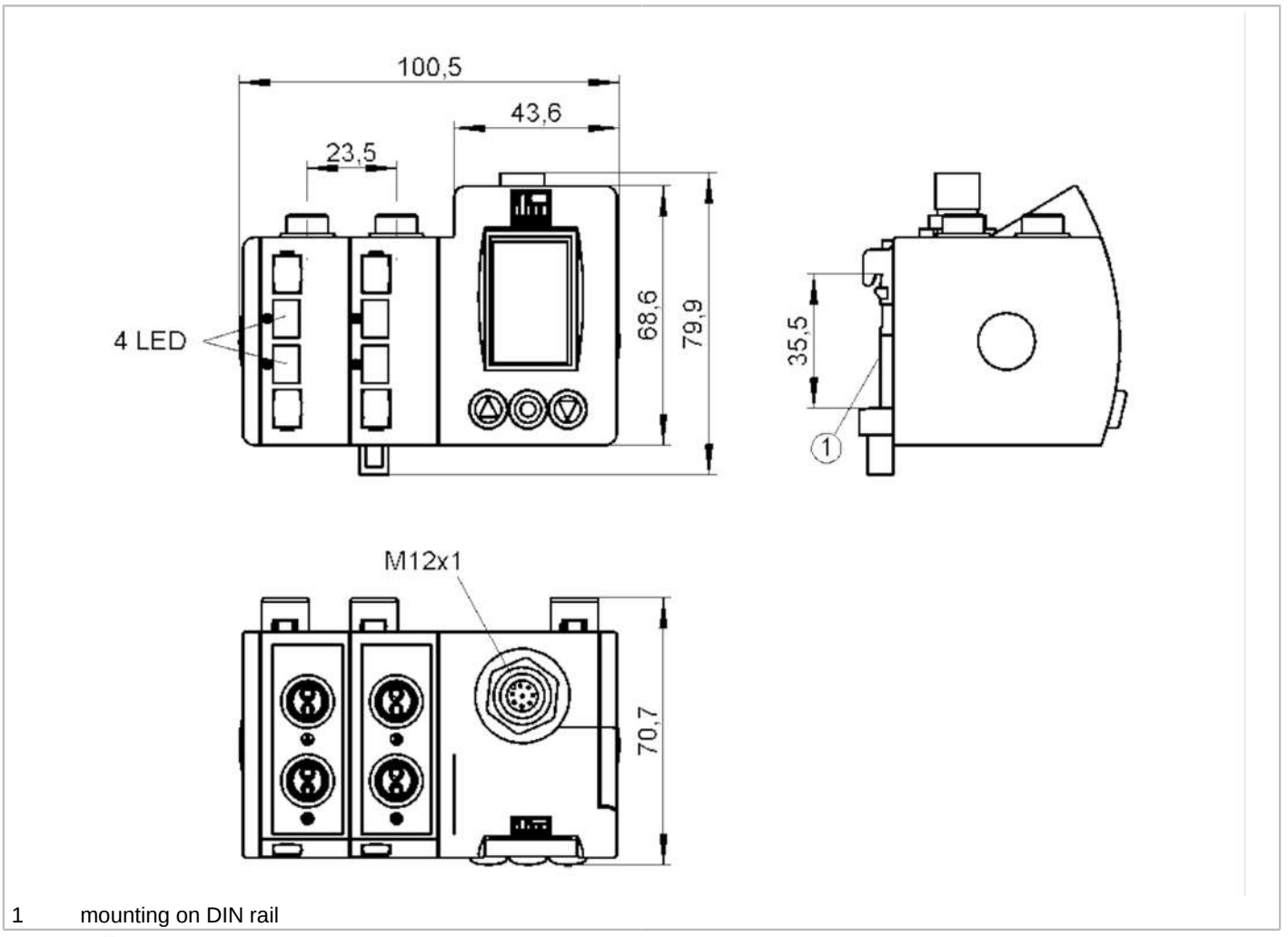

1 mounting on DIN rail

Product characteristics		
Type of light		red light
Housing		rectangular
Application		
Special feature		Function check output
Electrical data		
Operating voltage	[V]	12...36 DC
Current consumption	[mA]	50; ((24 V))
Max. power consumption	[VA]	1.2
Protection class		III
Reverse polarity protection		yes
Type of light		red light
Wave length	[nm]	630
Outputs		
Electrical design		PNP
Output function		light-on/dark-on mode; (programmable)

OO5005

Fibre-optic amplifier

OOF-FPKG/M12/GL4

Max. voltage drop switching output DC	[V]	2	
Function check output		yes	
Max. current load for function check output	[mA]	200	
Permanent current rating of switching output DC	[mA]	200	
Switching frequency DC	[Hz]	1500	
Notes on switching frequency	[Hz]	typical	
Short-circuit protection		yes	
Type of short-circuit protection		pulsed	
Overload protection		yes	
Time function	[s]	0.001...0.1	
Detection zone			
Range	[m]	< 0.4; (Through-beam sensor)	
Range	[mm]	0...200; (Diffuse reflection sensor)	
Range adjustable		yes	
Software / programming			
Parameter setting options		automatic and manual switch point setting; logic functions AND, OR; second switch point	
Operating conditions			
Ambient temperature	[°C]	-20...60	
Protection		IP 65	
Tests / approvals			
EMC		EN 60947-5-2	
		EN 55011	class B
Mechanical data			
Weight	[g]	508	
Housing		rectangular	
Dimensions	[mm]	79.9 x 100.5 x 70.7	
Number of channels		4	
Fibre optic connection		FE-00 / FT-00	
Materials		housing: ABS; display window: PMMA; LED window: SEPS; cover: diecast zinc plastic coated (PA)	
Lens alignment		side lens	
Displays / operating elements			
Display			full graphic LCD display, rotation of the display by 180° possible language selection (German, English, French)
		switching status	4 x LED, yellow
Electronic lock		yes	
Accessories			
Items supplied		rail: 1 x 89 mm, EN 60715	
Remarks			
Remarks		operating voltage "supply class 2" according to cULus	
Pack quantity		1 pcs.	

OO5005

Fibre-optic amplifier

OOF-FPKG/M12/GL4

Electrical connection

Connector: 1 x M12; coding: A



Connection

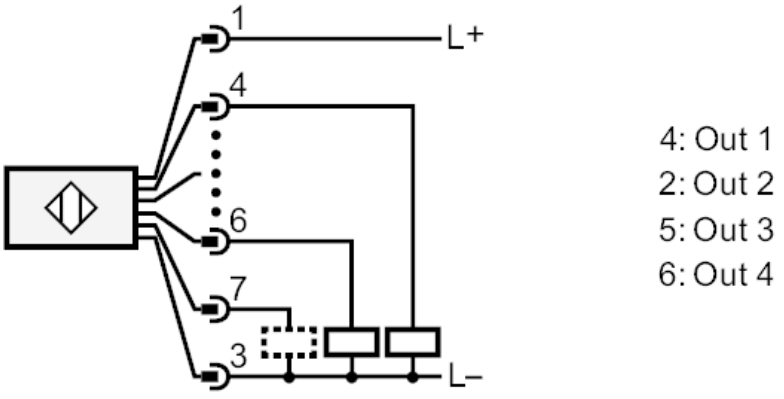

7	Function check output