Product Data Sheet | 4850 ZW



4850 ZW

INDEX

1 General 3

2 Mechanics 3

2.1 General 3
2.2 Connections 4

3 Operating Data 5

3.1 Electrical Operating Data 5
3.2 Operating Data - Electrical Interface -Output 6
3.3 Electrical Features 6
3.4 Aerodynamic 6
3.5 Sound Data 8

4 Environment 8

4.1 General 8
4.2 Climatic requirements*) 8

5 Safety 9

5.1 Electrical Safety 9
5.2 Approval Tests 9

6 Reliability 9

6.1 General 9

1 General

Fan type	Fan
Rotational direction looking at rotor	clockwise
Airflow direction	Air outlet over struts
Bearing system	Sleeve bearing
Mounting position	any
Balancing grade	2,5

2 Mechanics

2.1 General

Width	119,0 mm	
Height	119,0 mm	
Depth	38,0 mm	
Diameter	0,0 mm	
Weight	0,540 kg	
Housing material	Metal	
Impeller material	Metal	
Max. torque when mounted across both mounting flanges Screw size	wire outlet corner: 120 Ncm remaining corners: 350 Ncm ISO 4762 - M4 degreased, without an additional brace and without washer	

2.2 Connections

Electrical connection	Wires	
Length of lead wire Tolerance	L = 310,0 mm +- 10,0 mm	
Length of tube Tolerance	see drawing	
Wire gauge (AWG)	22	
Insulation diameter	2,50 mm	
Plug	see drawing	
Contact	see drawing	





	Colour	Operation
Wire 1	black	L
Wire 2	black	N

3 Operating Data

3.1 Electrical Operating Data

Measurement conditions:	Normal air density = 1,2 kg/m3; Temperature 23°C +/- 3°C; Motor axis horizontal;warm-up time before measuring 5 minutes (unless otherwise specified). In the intake and outlet area should not be any solid obstruction within 0,5 m.

Δp = 0: corresp. to free air flow (see section 3.4)
I: corresp. to RMS line current

Features	Condition	Symbol	Values	
Frequency	Δp = 0	f	50 Hz	60 Hz
Nominal voltage Tolerance	Δp = 0	U_N	230,0 V + 6,0 % - 10,0 %	230,0 V + 6,0 % - 10,0 %
Power consumption Tolerance	Δp = 0	P	13,0 W +- 10,0 %	12,0 W +- 10,0 %
Speed Tolerance	Δp = 0	n	1.700 1/min +- 10,0 %	1.800 1/min +- 10,0 %

3.2 Operating Data - Electrical Interface -Output

Tacho type	None

3.3 Electrical Features

Locked rotor protection	Impedance
Locked rotor current at Un	

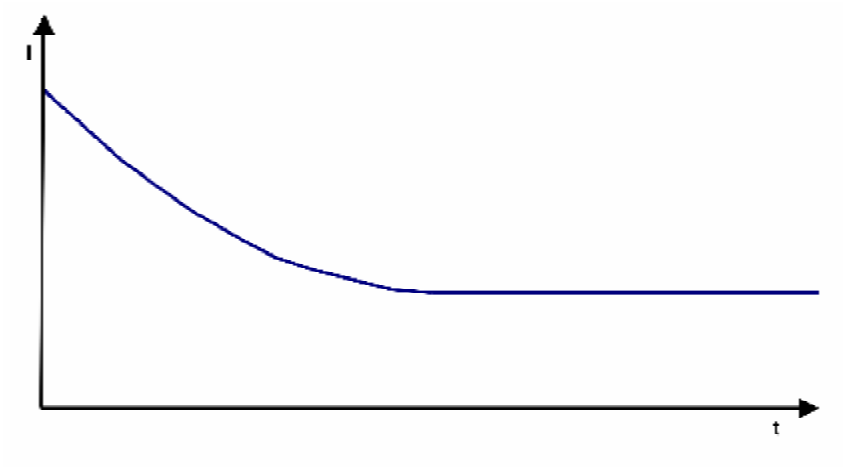

3.4 Aerodynamic

Measurement conditions:	Measured with a double chamber intake rig acc. to DIN EN ISO 5801. Normal air density = 1,2 kg/m3; Temperature 23°C +/- 3°C; In the intake and outlet area should not be any solid obstruction within 0,5 m.

a.) Operation condition:
1.700 1/min at free air flow Frequency: 50 Hz

Max. free-air flow (Δp = 0 / $\dot{V}$ = max.)	98,0 m3/h
Max. static pressure (Δp = max. / $\dot{V}$ =0)	27 Pa

b.) Operation condition:
1.800 1/min at free air flow Frequency: 60 Hz

Max. free-air flow (Δp = 0 / $\dot{V}$ = max.)	104,0 m3/h
Max. static pressure (Δp = max. / $\dot{V}$ =0)	24 Pa

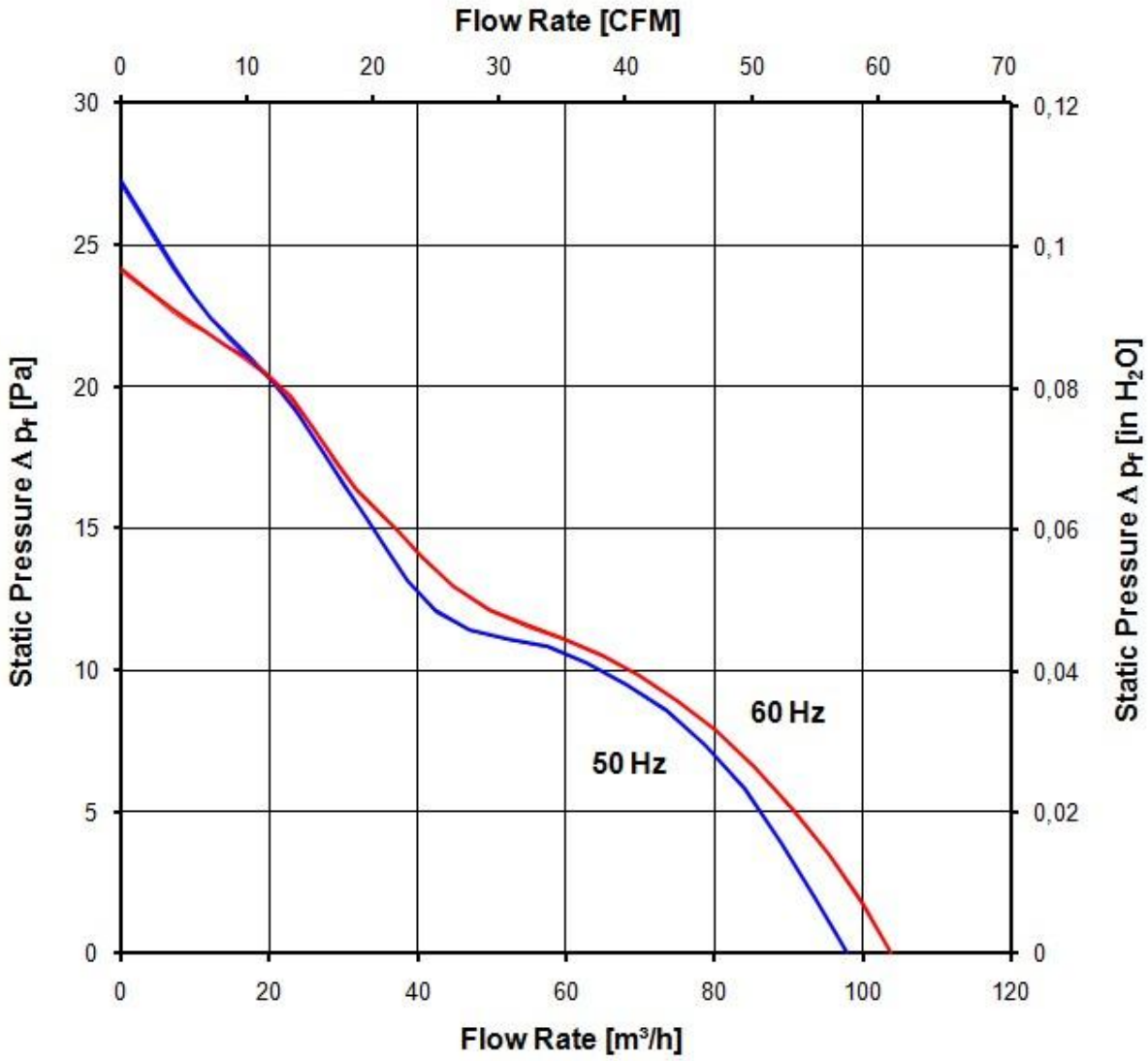
Flow Rate [CFM]
0
10
20
30
40
50
60
70
30
25
20
15
10
5
0
0,12
0,1
0,08
0,06
0,04
0,02
0
Static Pressure Δ pf [Pa]
Static Pressure Δ pf [in H2O]
60 Hz
50 Hz
0
20
40
60
80
100
120
Flow Rate [m³/h]

3.5 Sound Data

Measurement conditions:	Sound pressure level: 1 Meter distance between microphone and the air intake. Sound power level: Acc. to DIN 45635 part 38 (ISO 10302) Measured in a semianchoic chamber with a background noise level of Lp(A) < 5 dB(A) For further measurement conditions see section 3.4

a.) Operation condition:
1.700 1/min at free air flow Frequency: 50 Hz

Optimal operating point	74,0 m3/h @ 7 Pa	
Sound power level at the optimal operating point	4,0 bel(A)	
Sound pressure level at free air flow, measured in rubber bands	27,0 dB(A)	

b.) Operation condition:
1.800 1/min at free air flow Frequency: 60 Hz

Optimal operating point	94,0 m3/h @ 3 Pa	
Sound power level at the optimal operating point	4,1 bel(A)	
Sound pressure level at free air flow, measured in rubber bands	28,0 dB(A)	

4 Environment

4.1 General

Min. permitted ambient temperature TU min.	-10 °C / 50 Hz -10 °C / 60 Hz	
Max. permitted ambient temperature TU max.	65 °C / 50 Hz 70 °C / 60 Hz	
Min. permitted storage temperature TL min.	-40 °C	
Max. permitted storage temperature TL max.	80 °C	

4.2 Climatic requirements*)

Humidity requirements	humid heat, constant; according to DIN EN 60068-2-78, 14 days	
Water exposure	None	
Radiation exposure	None	
Dust requirements	None	
Salt fog requirements	None	
Harmful gas requirements	None	

*) Permittet application area:
The product is intended for use in sheltered rooms with controlled temperature and controlled humidity. Directly exposure to water must be avoided.

Pollution degree 1 (according DIN EN 60664-1)
There is either no pollution or it occurs only dry, non-conductive pollution. The pollution has no negative impact.

5 Safety

5.1 Electrical Safety

Dielectric strength DIN EN 60950 (VDE 0805) and DIN EN 60335 (VDE 0700) A.) Type test Measuring conditions: After 48h of storage at 95% R.H. and 25°C. No arcing or breakdown is allowed! All connections together to ground. B.) Routine test Measuring conditions: At indoor climate. No arcing or breakdown is allowed! All connections together to ground.	1500 VAC / 1 Min. 1500 VAC / 1 Sec.
Isolation resistance Measuring conditions: After 48h of storage at 95% R.H. and 25°C measured with U=500 VDC for 1 min.	RI > 50 MOhm
Air and leakage distances	2,0 mm / 1,8 mm
Protection class	I

5.2 Approval Tests

CE	Yes
UL	Yes / UL507, Electric Fans
VDE	Yes / Approval acc. to EN 60950 (VDE 0805) - Information technology equipment
CSA	Yes / C22.2 No. 113 Fans and Ventilators
CCC	Yes / GB 12350 Safety Requirements for small Power Motors

The approval tests are observed to:
U approval max.: 230 V / f: 60 Hz @ TU approval max.: 70 °C

6 Reliability

6.1 General

Life expectancy L10 at TU = 40 °C	50.000 h / 50 Hz 52.500 h / 60 Hz	
Life expectancy L10 at TU max.	27.500 h / 50 Hz 25.000 h / 60 Hz	

Copying of this document, and giving it to others and the use or communication of the contents thereof, are forbidden without express authority. Offenders are liable to the payment of damages. All rights are reserved in the event of the grant of a patent or the registration of a utility model or design.

Schutzvermerk nach DIN ISO 16016 beachten/
Refer to protection notice DIN ISO 16016!

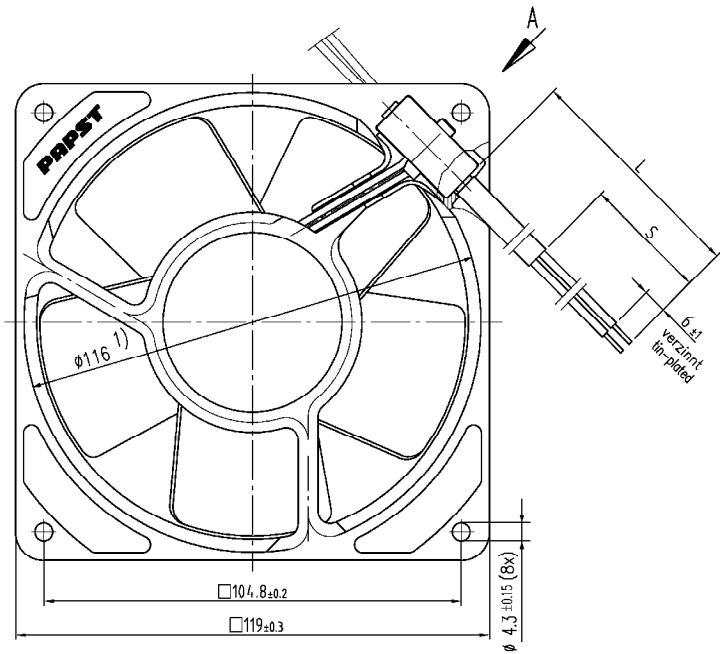

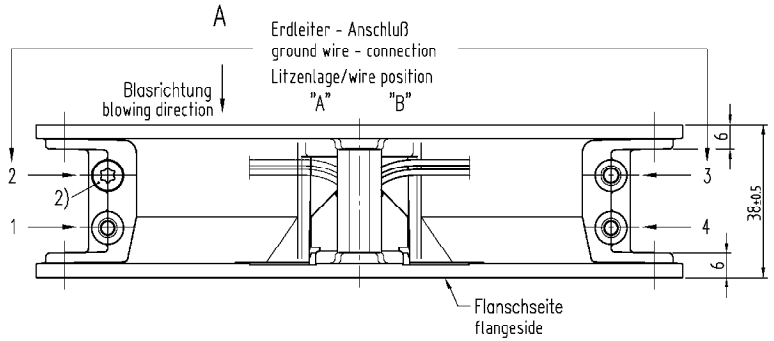

Anzahl und Länge der Litzen sowie
Schlauchlänge, Litzenlage und Erdleiter-Anschluß s.Spezifikation

length and number of wires and of tube length,
wires length and ground wire -connection see design specification

1) Maße für Montagewand
2) Schraube: Duo-Taptite nach DIN 7500,
CM 4x8, Torx

1) dimensions for assembly wall
2) Screw: Duo-Taptite to DIN 7500,
CM 4x8, Torx

Axialspiel bei
- Kugellagerung (K): 0 (mit Federausgleich)
- Gleitlagerung (G): 0.1 - 0.6
- Gleitlagerung (GF): 0 (mit Federausgleich)

axial clearance by
- ball bearing (K): 0 (with spring compensation)
- sleeve bearing (G): 0.1 - 0.6
- sleeve bearing (GF): 0 (with spring compensation)

SAP-Status/State	Aend.-Nr./Change-No.		Auto CAD-System-Version	ebmpapst CAD-Umgebung/ CAD-Environment	
			Datum/Date	Name/Name	
Tolerierung/Tolerances:		Bearb./ Drawn			Artikel/Title
		Gepr./ Checked			
Allgemeintoleranzen/Gen. Tolerances:		Freig./ Releas.			
ebm-papst St. Georgen GmbH & Co. KG					Zchg.-Nr./ Drawing.-No.:

Werkstoff/Material:	Volumen/Volume [mm³]:
	Gewicht/Mass [g]:

Ers.f.Zchg./Replaces:				
Dokumenttyp/Type of Document	Teildokument/Blatt/Page	Index/Index	Format/Size:	Massstab/scale

11/09