# E40237

## Screw-in adapter for process sensors

**ADAPT SI/G3/8/VA**

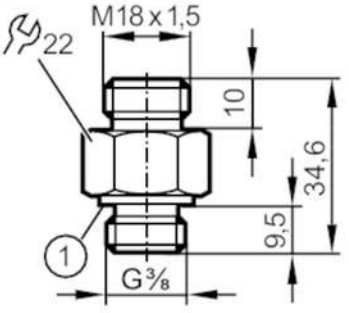


1 O-ring

| | | |
|---|---|---|
| **Application** | | |
| Application | | for industrial applications |
| Media | | liquids and gases |
| Pressure rating | [bar] | 300 |
| **Tests / approvals** | | |
| Pressure Equipment Directive<br>EAC | | The adapter is intended for use in devices, machines and installations that do not fall under the categories of the technical rule TR CU 032/2013. |
| **Mechanical data** | | |
| Weight | [g] | 64.2 |
| Materials | | stainless steel (1.4404 / 316L) |
| Sensor connection | | M18 x 1,5 internal thread |
| Process connection | | threaded connection G 3/8 |
| Insertion depth | [mm] | 13.5; (measuring probe SID, SFD, TN) |
| **Accessories** | | |
| Items supplied | | O-ring: 1, FKM |
| **Remarks** | | |
| Pack quantity | | 1 pcs. |