Product: ASBS 2 M12-5S 1-2 F



T-Splitter Sensor/Actuator M12 to M12, IP67, PUR orange body, 5-pin M12 Male to 4-pin M12 female straight connection, 50 V AC / 60 V DC, UL: 30 V AC/DC, 4 A

Product Description

T-Splitter Sensor/Actuator M12 to M12, IP67, PUR orange body, 5-pin M12 Male to 4-pin M12 female straight connection, fixed curled nuts to relief installation effort, 2 x M4 mounting holes with distance pins to mounting plate, 50 V AC / 60 V DC, UL: 30 V AC/DC, 4 A

Technical Drawing

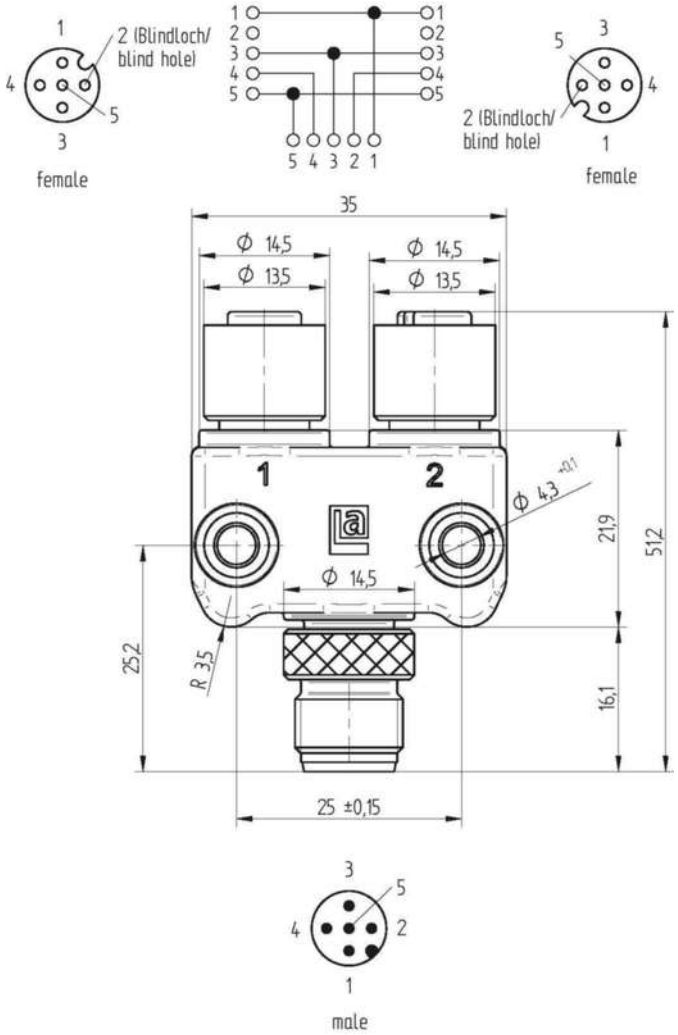

Technical Specifications

Product Description

Product Family:	Sensor / Actuator Connectors
Brand:	Lumberg Automation
Connector Type:	T-Splitter

Rated Voltage:	50 V AC / 60 V DC
Rated Voltage (UL):	30 V AC/DC
Rated Impulse Voltage:	1,5 kV
Rated Current*:	4 A

Technical Data Side 1

Product Sub Family:	M12 T-Connectors
Attachment Type:	Screw-Locking
Number of Pins:	5
Contact Resistance:	≤ 5 mOhm
Insulation Resistance:	> 10^9 Ohm
Mating Cycles:	≤ 100
Ambient Temperature (Operation)*:	-25°C to +90°C (notice derating)
Protection Degree / IP Rating**:	IP67
Pollution Degree:	3 acc. to DIN EN 60664-1 (VDE 0110-1)
Contact Base Material:	CuZn
Contact Plating:	Ni/Au
Contact Bearer Material:	PUR
Contact Bearer Color:	Orange (male side), Black (female side)
O-Ring Material:	FKM

Approvals

UL-File:	E315587
UL:	cULus

Safety & Environmental Compliance

RoHS Compliant:	Yes

Notes

Variants

Item #	Item Description
33268	ASBS 2 M12-5S 1-2 F

© 2024 Belden, Inc

All Rights Reserved.

Although Belden makes every reasonable effort to ensure their accuracy at the time of this publication, information and specifications described here in are subject to error or omission and to change without notice, and the listing of such information and specifications does not ensure product availability.

Belden provides the information and specifications herein on an "ASIS" basis, with no representations or warranties, whether express, statutory or implied. In no event will Belden be liable for any damages (including consequential, indirect, incidental, special, punitive, or exemplary damages) whatsoever, even if Belden has been advised of the possibility of such damages, whether in an action under contract, negligence or any other theory, arising out of or in connection with the use, or inability to use, the information or specifications described herein.

All sales of Belden products are subject to Belden's standard terms and conditions of sale.

Belden believes this product to be in compliance with all applicable environmental programs as listed in the data sheet. The information provided is correct to the best of Belden's knowledge, information and belief at the date of its publication. This information is designed only as a general guide for the safe handling, storage, and any other operation of the product itself or the one that it becomes a part of. The Product Disclosure is not to be considered a warranty or quality specification. Regulatory information is for guidance purposes only. Product users are responsible for determining the applicability of legislation and regulations based on their individual usage of the product.