Product

TK PC 75-4-v



Empty enclosure - Industrial Quality -, box and cover: glass fibre reinforced polycarbonate, grey, similar to RAL 7035

with integrated cable gland (seal range 5-10 mm)

Article: TK PC 75-4-v

Technical Data

Dimensions:

Width:	65 mm
Length:	50 mm
Height:	35 mm
interior height:	24 mm

material:

Base:	Polycarbonate, glass-fibre reinforced, grey simila
Cover:	Polycarbonate, glass-fibre reinforced, grey simila
Sealing:	Polyurethane
Cover screw:	Polyamide 6, fiber-glass reinforced

Properties:

Ingress protection:	IP66 - acc. EN 60529 / DIN VDE 0470-1
Ambient temperature (min.):	-35 °C
Ambient temperature (max.):	80 °C
Ambient temperature (24 h):	60 °C
Max. rel. humidity at 40° C:	50%
Max. rel. humidity at 25° C (short Therm):	{100%}
Rated insulation voltage AC:	690V
Impact restistance:	{IK08 nach DIN EN 5012 / VDE 0470 Teil 100 }
Protection class:	II - isolate protection acc. VDE 0106 Protective insulation as per VDE 0106

All information is provided without warranty. We reserve the right to make improvements in the interest of technical progress.

Halogen-free:	√
Heavy metals-free:	√
PVC-free:	√
Silicone-free:	√
UV resistance:	√
Weatherproof:	√
Combustion behaviour to UL:	5VA nach UL 50 / UL 746C
Combustion behaviour to UL:	{V-2 nach UL 94}
Combustion behaviour to VDE:	960°C acc. VDE 0471/ EN 60695
Fitted for outdoor application:	√
Knockouts:	√
Sealing area/mm:	5 - 10 mm

All information is provided without warranty. We reserve the right to make improvements in the interest of technical progress.

Drawing

All information is provided without warranty. We reserve the right to make improvements in the interest of technical progress.

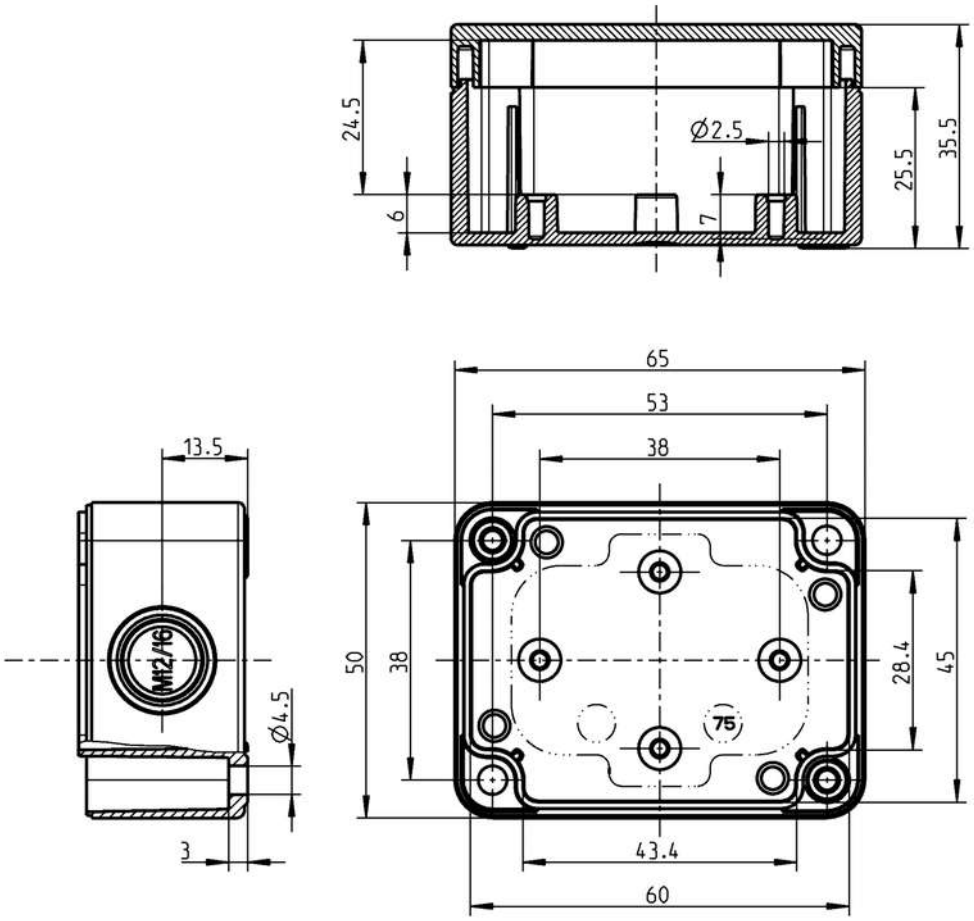

Weitergabe sowie Vervielfaeltigung dieser Unterlage, Verwertung und Mitteilung ihres Inhalts nicht gestattet, soweit nicht ausdruecklich zugestanden. Zuwiderhandlungen verpflichten zu Schadenersatz. Alle Rechte fuer den Fall der Patenterteilung oder Gebrauchsmuster-eintragung vorbehalten.

Schutzvermerk nach DIN 34 beachten!

(Verwendungsbereich)	(Zul.Abw.) DIN 16 901	(Oberflaeche) Wkzg. Ra 0.63 poliert Artikel glatt	Masstab 1:1	(Volumen in cm³)	
			(Werkstoff,Halbzeug)		
		Datum / Name	(Benennung)		
	Bearb. 23.05.02 WGe		Massblatt TK 75		
	Gepr.				
	Vers.				
	Status				
	spelsberg		(Zeichnungsnummer) M-TK-75	Blatt 1 Bl.	
Zust. / Aenderung / Datum / Name	(Urspr.)		(Ersatz fuer:)		

All information is provided without warranty. We reserve the right to make improvements in the interest of technical progress.

Manufacturer

Günther Spelsberg GmbH + Co. KG
Im Gewerbepark 1
58579 Schalksmühle
+49 (0)2355/892-0
+49 (0)2355/892-299
www.spelsberg.de

All information is provided without warranty. We reserve the right to make improvements in the interest of technical progress.