# O6T206

## Diffuse reflection sensor

O6T-FNKG/AS/3P

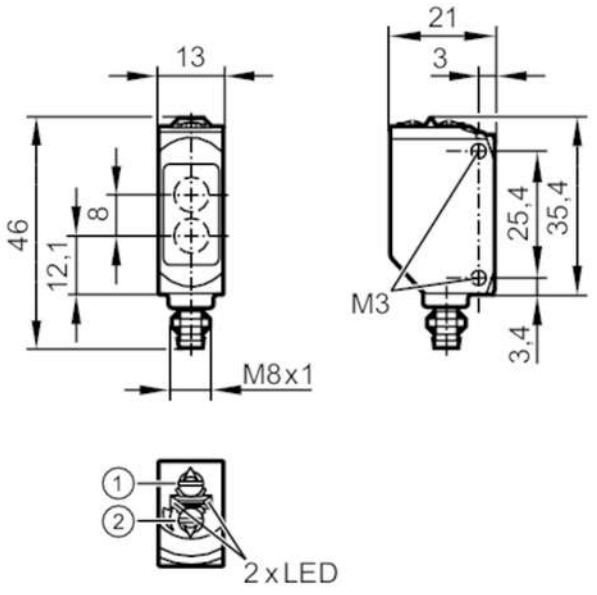


1: output function switch
2: potentiometer sensitivity
receiver in upper lens
transmitter in lower lens

| | | |
|---|---|---|
| **Product characteristics** | | |
| Type of light | | red light |
| Housing | | rectangular |
| **Application** | | |
| Function principle | | Diffuse reflection sensor |
| **Electrical data** | | |
| Operating voltage | [V] | 10...30 DC |
| Current consumption | [mA] | 16;  ((24 V)) |
| Protection class | | III |
| Reverse polarity protection | | yes |
| Type of light | | red light |
| Wave length | [nm] | 633 |
| **Outputs** | | |
| Electrical design | | NPN |
| Output function | | light-on/dark-on mode;  (selectable) |
| Max. voltage drop switching output DC | [V] | 2.5 |
| Permanent current rating of switching output DC | [mA] | 100 |
| Switching frequency DC | [Hz] | 1000 |
| Short-circuit protection | | yes |
| Type of short-circuit protection | | pulsed |
| **Detection zone** | | |
| Range | [mm] | 5...500;  (white paper 200 x 200 mm 90% remission) |

# O6T206

## Diffuse reflection sensor

O6T-FNKG/AS/3P

| | | | |
|---|---|---|---|
| Setting range | [mm] | 100...500 | |
| Range adjustable | | yes | |
| Max. light spot diameter | [mm] | 15 | |
| Light spot dimensions refer to | | at maximum range | |
| **Operating conditions** | | | |
| Ambient temperature | [°C] | -25...60 | |
| Protection | | IP 65; IP 67 | |
| **Tests / approvals** | | | |
| EMC | | EN 60947-5-2 | |
| MTTF | [years] | 897 | |
| UL approval | | UL Approval no. | E001 |
| **Mechanical data** | | | |
| Weight | [g] | 18.1 | |
| Housing | | rectangular | |
| Dimensions | [mm] | 46 x 13 x 21 | |
| Materials | | housing: ABS; PPSU | |
| Lens material | | PMMA | |
| Lens alignment | | side lens | |
| Sealing material | | EPDM | |
| Tightening torque | [Nm] | 0.5 | |
| **Displays / operating elements** | | | |
| Display | | switching status | 1 x LED, yellow |
| | | operation | 1 x LED, green |
| **Remarks** | | | |
| Remarks | | operating voltage "supply class 2" according to cULus | |
| Pack quantity | | 1 pcs. | |

**Electrical connection**

Connector: 1 x M8; coding: A; Locking: brass, coated; Sealing: EPDM



# O6T206

## Diffuse reflection sensor

**O6T-FNKG/AS/3P**

### Connection

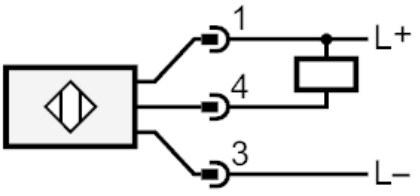


### Diagrams and graphs

excess gain graph

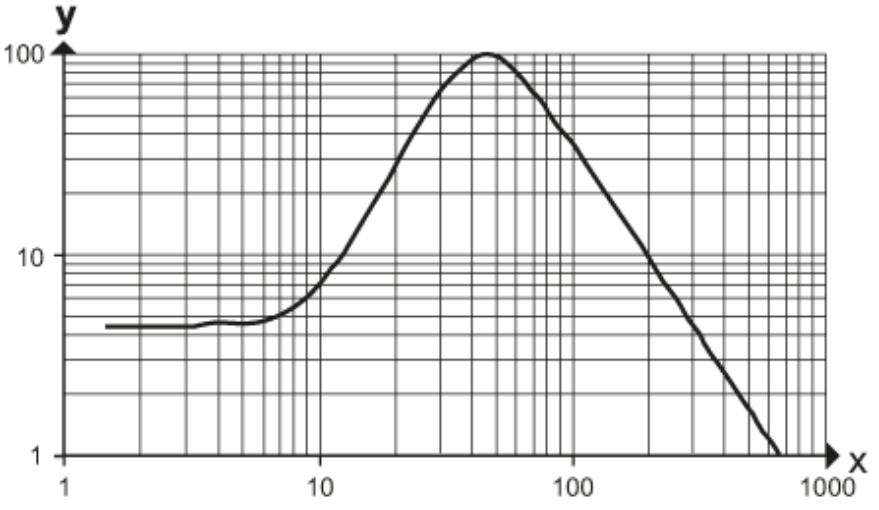


x: distance [mm]

y: excess gain factor