DSL MAINS LOCK SWITCHES

GENERAL ELECTRICAL & MECHANICAL SPECIFICATION

Switch Rating:	4/80A @250V ac. R/C
Life:	>15,000 Cycles
Operating Temperature:	-25ºC to +85 ºC
Proof Voltage:	3kV min. (Initial)
Insulation Resistance:	>999 MΩ at 500Vdc (Initial)
Contact Resistance:	<20 MΩ (Initial)
Flame Retardency:	UL94 V0
Switch contacts:	Silver Cadmium Oxide
Switch Chamber:	Polyamide 6.6 G.F. V0 Rated
Tag Panel:	SRBP
Terminals:	Brass CZ108 Ag Plated
Lock Housing:	Brass - Chrome or Nickel Plated
Keys:	Nickel Silver

RoHS COMPLIANT



Switch Module ENEC approved to EN61058 by VDE

CIRCUITRY	TERMINAL LAYOUT VIEWED FROM REAR OF SWITCH	KEY WITHDRAWAL POSITIONS
2 POLE OFF-ON	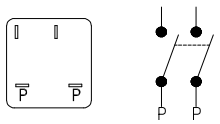	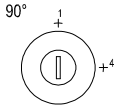
2 POLE ON-OFF (NORMALLY CLOSED)	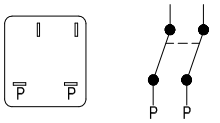	

GENERAL FEATURES

- Over 15000 key combinations – keys to differ
- Key –operated Lock with dimpled 6 pin lock
- Made in UK
- Common keys available – keys to pass
- Two part construction. The lock is inserted into the panel from the front. The mains switch module snaps-on, from the rear of the panel.
- Standard solder terminals (Printed circuit terminals optional – add /P to part number).
- Two keys per lock. Additional keys to order.
- Snap on switch module

DSL-6 ORDER C0DES			
SWITCH	KEY	POSITION IN WHICH KEY FREE	ORDER CODES
2 POLE OFF – ON	DIFFERS DIFFERS	0º and 90º (1+4) 0º only (1)	DSL-6-A-D DSL-6-B-D
2 POLE OFF –ON	SAME SAME	0º and 90º (1+4) 0º only (1)	DSL-6-C-S DSL-6-D-S
2 POLE ON-OFF	DIFFERS DIFFERS	0º and 90º (1+4) 0º only (1)	DSL-6-E-D DSL-6-F-D
2 POLE ON-OFF	SAME SAME	0º and 90º (1+4) 0º only (1)	DSL-6-G-S DSL-6-H-S

LOCK TYPE: BRASS Lock 6 pin – low profile or with decorative panel ring.
LOCK MOVEMENT: 90º Step
LOCK COMBINATIONS: Over 15000 differ or all pass (same key for all locks).
KEY TYPE: Flat, double entry (key can be inserted into the lock either way up).
MASTER KEY SYSTEM AVAILABLE: No
MAXIMUM PANEL THICKNESS: 15mm.
ASSEMBLY WEIGHT: 90 grams

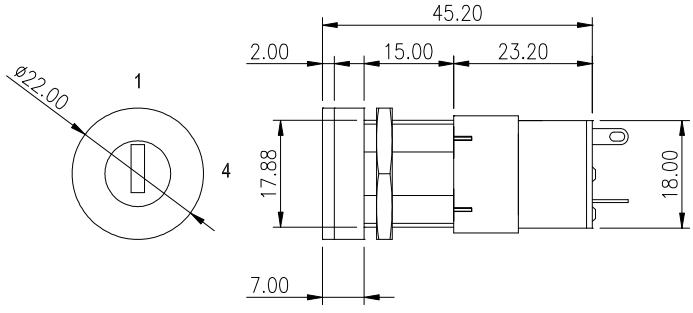

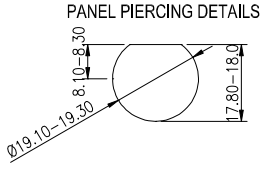

DSL LOCKSWITCH WITH SNAP-ON MS MODULE

Lorlin Electronics Ltd, Harwood Industrial Estate, Harwood rd, Littlehampton, W. Sussex BN17 7At England
Tel (+44) 01903 725121 Fax (+44) 01903 726808 E-mail sales@lorlin.co.uk / www.lorlin.co.uk