Fastening Technology

BES 20,0-BS-1
Order Code: BAM00H7

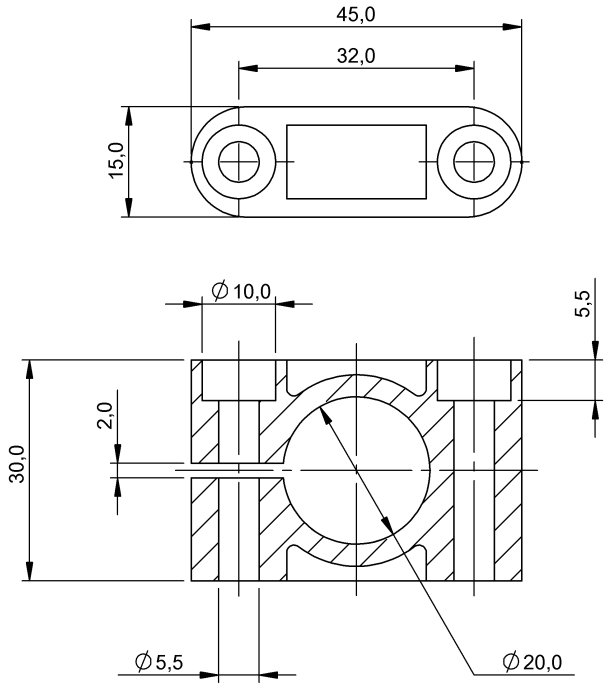

Basic features

Principle of operation	Clamp holder
Scope of delivery	Clamp holder (1x)
Use	for sensors Ø20 mm
Version	Mounting clamp

Material

Material	PA 6

Mechanical data

Dimension	45 x 15 x 30 mm
Mounting part	Screws, clamps