E21056

Mounting set for photoelectric sensors

MOUNTING SET OH

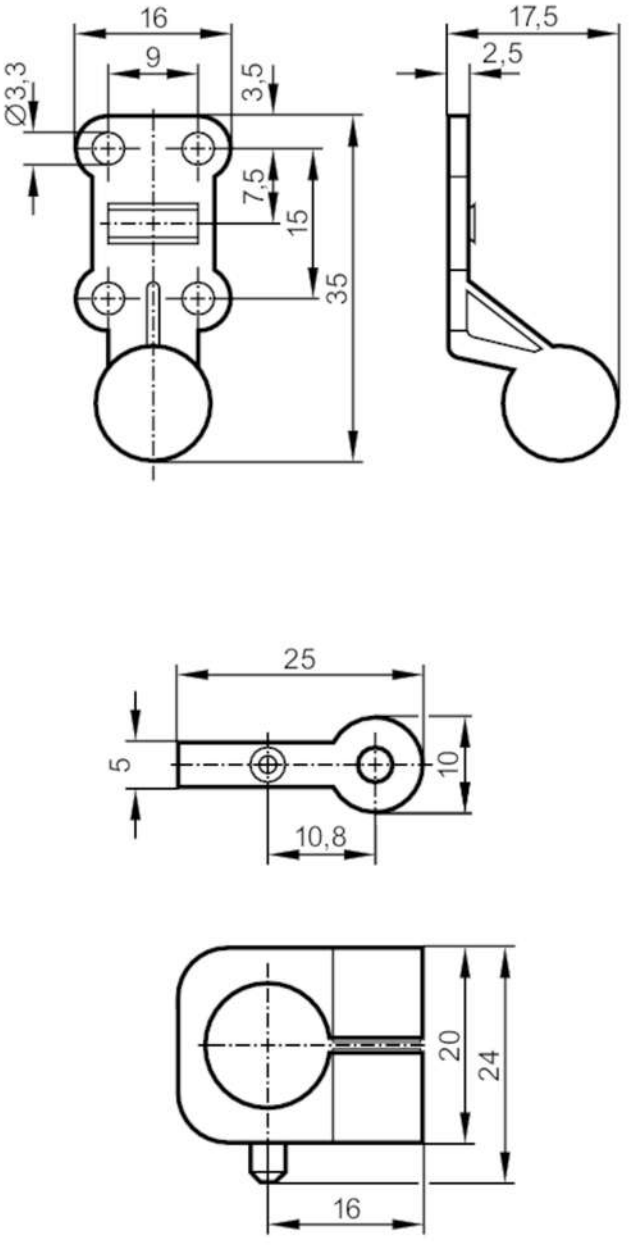

Operating conditions		
Ambient temperature	[°C]	-30...60
Mechanical data		
Weight	[g]	10.1
Materials		ABS
Remarks		
Pack quantity		1 pcs.