efector300

SI5010

SID10ADBFPKG/US-100

Flow sensors

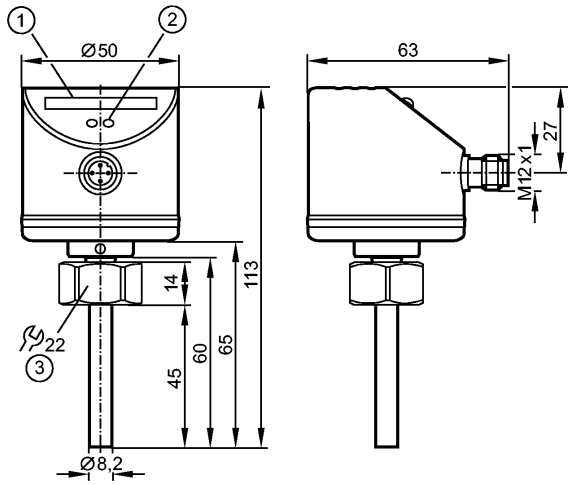

1: LED display
2: setting pushbutton
3: tightening torque 25 Nm

Made in Germany

CE cULus LISTED CRN

Product characteristics		
Flow monitor		
Compact type for adapter		
Process connection: internal thread M18 x 1.5 for adapter		
Pressure rating: 300 bar		
Setting range: 3...300 cm/s (liquids)		
Application		
Application		liquids and gases
Medium temperature	[°C]	-25...80
Electrical data		
Electrical design		DC PNP
Operating voltage	[V]	18...36 DC
Current consumption	[mA]	< 60
Protection class		III
Reverse polarity protection		yes
Outputs		
Output function		normally open / closed programmable
Current rating	[mA]	250
Voltage drop	[V]	< 2.5
Short-circuit protection		pulsed
Overload protection		yes
Measuring / setting range		
Liquids		
Setting range	[cm/s]	3...300
Greatest sensitivity	[cm/s]	3...100
Gases		
Setting range	[cm/s]	200...3000
Greatest sensitivity	[cm/s]	200...800
Accuracy / deviations		

SI5010

SID10ADBFPKG/US-100

Flow sensors

Switch point accuracy	[cm/s]	± 2...± 10 *)
Hysteresis	[cm/s]	2...5 *)
Repeatability	[cm/s]	1...5 *)
Max. temperature gradient of medium	[K/min]	300
Reaction times		
Power-on delay time	[s]	10
Response time	[s]	1...2 ***) / 1...10 ****)
Software / programming		
Adjustment of the switch point		pushbuttons
Environment		
Pressure rating	[bar]	300
MAWP (for applications according to CRN)	[bar]	208
Ambient temperature	[°C]	-25...80
Storage temperature	[°C]	-25...100
Protection		IP 67
Tests / approvals		
EMC		DIN EN 61000-6-2 DIN EN 61000-6-3
Shock resistance		DIN EN 60068-2-27: 50 g (11 ms)
Vibration resistance		DIN EN 60068-2-6: 20 g (55...2000 Hz)
MTTF	[Years]	298
Mechanical data		
Process connection		internal thread M18 x 1.5 for adapter
Materials (wetted parts)		stainless steel 316L / 1.4404; O-ring: FKM 8 x 1.5 gr 80° Shore A
Housing materials		stainless steel (304S15); PC (polycarbonate); PBT-GF 20; EPDM/X
Weight	[kg]	0.235
Displays / operating elements		
Function display	LED	10 LEDs, three-colour
Electrical connection		
Connection		M12 connector

Wiring



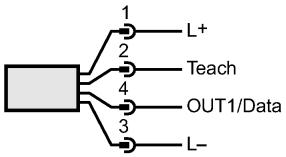

OUT1 / Data = switching signal for flow limit value and data channel for bidirectional communication
Teach = input for teach signal

Remarks	
Remarks	*) for water; 5...100 cm/s; 25°C (factory setting) **) for water; 5...100 cm/s; 10...70°C ***) for liquids and temperature gradient 1 K/min ****) for gases

SI5010

SID10ADBFPKG/US-100

Pack quantity	[piece]	1
Other data		
Temperature drift [cm/s x 1/K]		0.1 **)