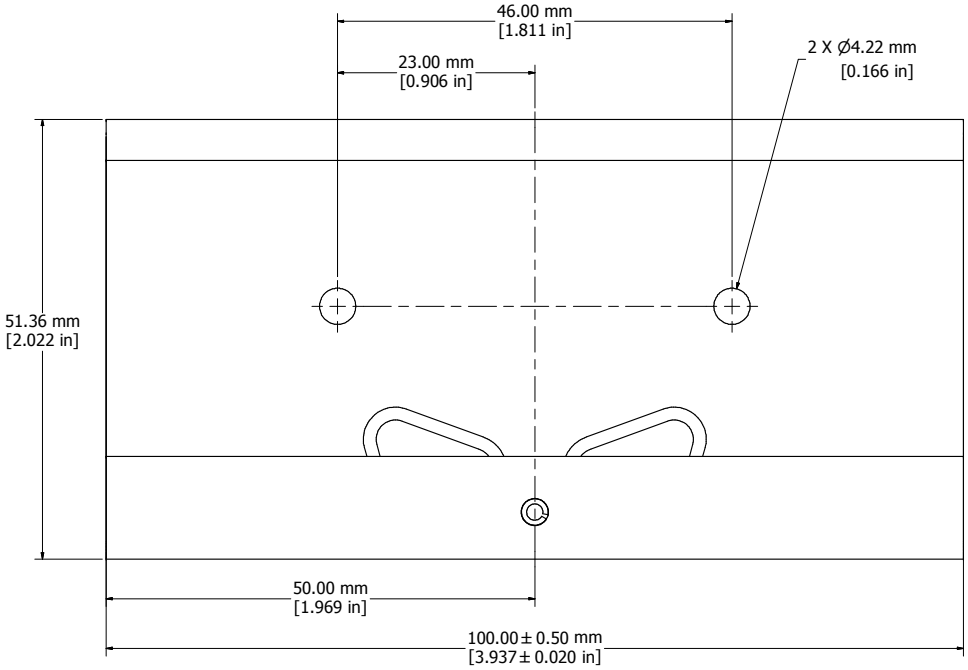

FRONT VIEW

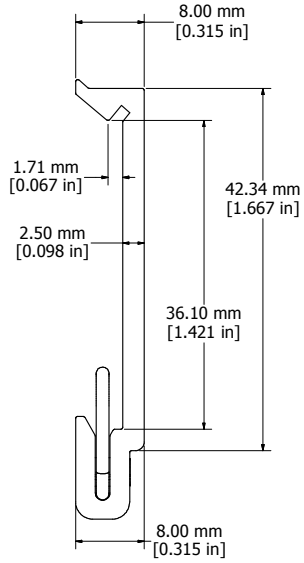

SIDE VIEW

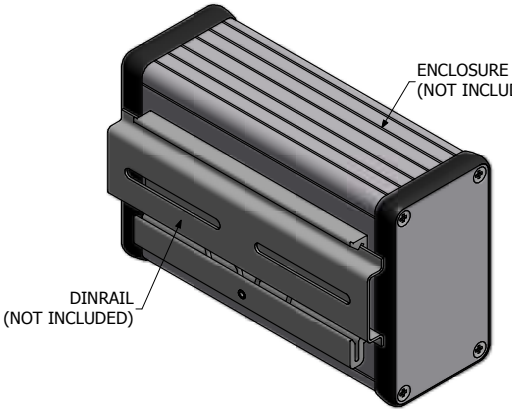

TYPICAL ASSEMBLY

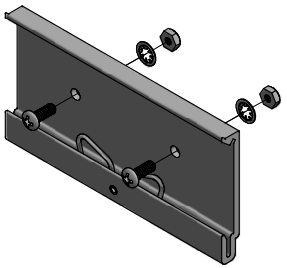

EXPLODED DINCLIP W/ HARDWARE

1427DIN100M
Material/Finish - Body - Clear Anodized Aluminum
- Spring - Galvanized Spring Steel Wire
Hardware
2 Screw - #6-32 x 3/8" Panhead
2 Nut - #6-32 Hex Nut
2 Washer - #6 Toothed Lockwasher

HAMMOND MANUFACTURING™

1427DIN100M

www.hammondmfg.com