ADAM-4060
ADAM-4068
ADAM-4069

4-ch Relay Output Module with Modbus

8-ch Relay Output Module with Modbus

8-ch Power Relay Output Module with Modbus

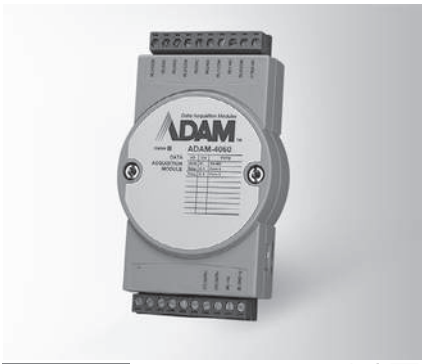

ADAM-4060

Specifications

General

- **Certification** FCC, CE
- **Connectors** 2 x plug-in terminal blocks (#14 ~ 22 AWG)
- **Power Consumption** 0.9 W @ 24 V DC typ. 1.3 W @ 24 V DC max.
- **Watchdog Timer** System (1.6 second)
- **Supported Protocols** ASCII command and Modbus/RTU

Relay Output

- **Breakdown Voltage** 500 V_{AC} (50/60 Hz)
- **Channels** 2 x Form A, 2 x Form C
- **Contact Rating (Resistive)** 0.6 A @ 125 V_{AC}, 0.3 A @ 250 V_{AC}, 2 A @ 30 V_{DC}, 0.6 A @ 110 V_{DC}
- **Initial Insulation Resistance** 100 MΩ min. at 500 V_{DC}
- **Relay off Time (Typical)** 5 ms
- **Relay on Time (Typical)** 4 ms
- **Maximum Operating Speed** 20 operations/min (at related load)



ADAM-4068

Specifications

General

- **Certification** FCC, CE
- **Connectors** 2 x plug-in terminal blocks (#14 ~ 28 AWG)
- **Power Consumption** 1 W @ 24 V DC typ. 1.7 W @ 24 V DC max.
- **Watchdog Timer** System (1.6 second) & Communication
- **Supported Protocols** ASCII command and Modbus/RTU

Relay Output

- **Breakdown Voltage** 500 V_{AC} (50/60 Hz)
- **Channels** 4 x Form A, 4 x Form C
- **Contact Rating (Resistive)** 0.5 A @ 120 V_{AC}, 0.25 A @ 240 V_{AC}, 1 A @ 30 V_{DC}, 0.3 A @ 110 V_{DC}
- **Initial Insulation Resistance** 1 GΩ min. at 500 V_{DC}
- **Relay off Time (Typical)** 4 ms
- **Relay on Time (Typical)** 3 ms
- **Maximum Operating Speed** 50 operations/min (at related load)



ADAM-4069

Specifications

General

- **Certification** FCC, CE
- **Connectors** 2 x plug-in terminal blocks (#14 ~ 28 AWG)
- **Power Consumption** 1.3 W @ 24 V DC typ. 2.3 W @ 24 V DC max.
- **Watchdog Timer** System (1.6 second) & Communication
- **Supported Protocols** ASCII command and Modbus/RTU

Relay Output

- **Breakdown Voltage** 1,000 V_{AC} (50/60 Hz)
- **Channels** 4 x Form A, 4 x Form C
- **Contact Rating (Resistive)** 5 A @ 250 V_{AC}, 5 A @ 30 V_{DC}
- **Initial Insulation Resistance** 1 GΩ min. at 500 V_{DC}
- **Relay off Time (Typical)** 5.6 ms
- **Relay on Time (Typical)** 5 ms
- **Maximum Operating Speed** 6 operations/min (at related load)

Common Specifications

General

- **Power Input** Unregulated 10 ~ 30 V_{DC}

Environment

- **Operating Humidity** 5 ~ 95% RH
- **Operating Temperature** -10 ~ 70°C (14 ~ 158°F)
- **Storage Temperature** -25 ~ 85°C (-13 ~ 185°F)

Ordering Information

- **ADAM-4060-F** 4-ch Relay Output Module with Modbus
- **ADAM-4068-C** 8-ch Relay Output Module with Modbus
- **ADAM-4069-B** 8-ch Power Relay Output Module with Modbus

Dimensions

Unit: mm

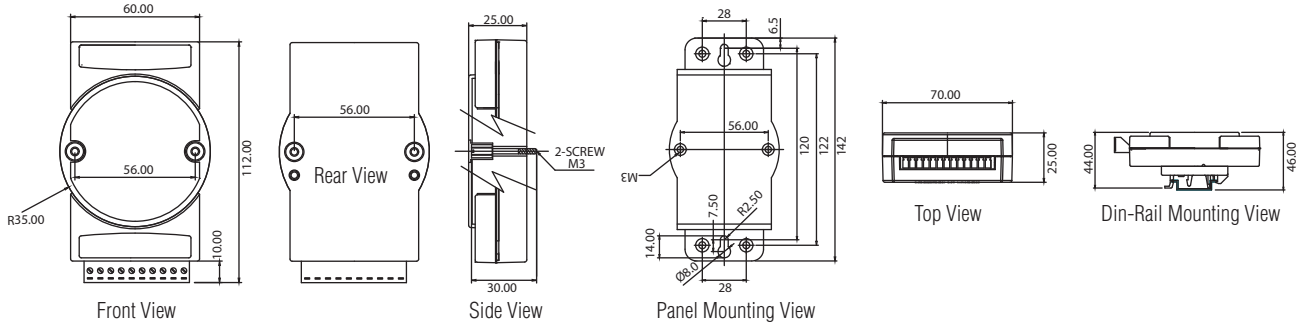

All product specifications are subject to change without notice.

Last updated: 11-Oct-2022