Protistor® size 14x51 gR

690VAC (IEC) / 700VAC (UL)

SEMICONDUCTOR PROTECTION FUSES

IEC HIGH-SPEED CYLINDRICAL FUSE-LINKS AC PROTECTION



These Protistor® size 14x51 have been designed to protect power semi conductors, complying with standard IEC 60269-1 and -4. They are extremely high interrupting rating fuses: 690VAC, with large band of ratings (current rating 1 to 63A).

Two models are existing: with or without trip-indicator.

TECHNICAL DATA OVERVIEW

Rated voltage AC (IEC)	690 V
Ampere Range (A)	1 ... 63 A
Size per Standard	14x51
Speed/Characteristic	gR
I.R. AC (IEC)	160 kA
I.R. AC (UL)	200 kA
I.R. DC (UL)	50 kA
Rated voltage AC (UL)	700 V
Rated voltage DC (UL)	500 V

FEATURES & BENEFITS

- IEC standard 60269-4 compliant
- UL 248-13 compliant
- gR class
- Clearing all overloads
- Improved safety and protection
- Enabling selective coordination among all
- Distribution circuit fuses
- With or without trip-indicator

STANDARDS

- IEC 60269-4
- UL Recognized
- UL 248-13
- CCC GB 1539.4
- RoHS compliant

MERSEN reserves the right to change, update or correct, without notice, any information contained in this datasheet.

PRODUCT RANGE



FR14GR69V16T

CP 14x51 gR with striker

Catalog number	Item number	Rated voltage AC (IEC)	Rated current I_n	Clearing I^2t at Rated Voltage	Rated breaking capacity AC	Power dissipation at I_n	Pre-arcing I^2t	Package	Weight
FR14GR69V2T	D1017178	690 V	2 A	1.8 A²s	160 kA	1.75 W	0.9 A²s	10	20 g
FR14GR69V4T	E1017179	690 V	4 A	13 A²s	160 kA	2.9 W	6.7 A²s	10	20 g
FR14GR69V6T	F1017180	690 V	6 A	35 A²s	160 kA	2 W	8 A²s	10	20 g
FR14GR69V8T	G1017181	690 V	8 A	40 A²s	160 kA	2.25 W	4.3 A²s	10	20 g
FR14GR69V10T	H1017182	690 V	10 A	45 A²s	160 kA	2.95 W	4.3 A²s	10	20 g
FR14GR69V12T	J1017183	690 V	12 A	60 A²s	160 kA	4.1 W	5.4 A²s	10	20 g
FR14GR69V16T	K1017184	690 V	16 A	125 A²s	160 kA	4.65 W	13.1 A²s	10	20 g
FR14GR69V20T	L1017185	690 V	20 A	230 A²s	160 kA	4.8 W	26.8 A²s	10	20 g
FR14GR69V25T	M1017186	690 V	25 A	385 A²s	160 kA	5.95 W	52.5 A²s	10	20 g
FR14GR69V32T	Q1017189	690 V	32 A	700 A²s	160 kA	6.9 W	96.7 A²s	10	20 g
FR14GR69V40T	S1017191	690 V	40 A	1050 A²s	160 kA	7.5 W	210 A²s	10	20 g
FR14GR69V50T	T1017192	690 V	50 A	2250 A²s	160 kA	8.75 W	387 A²s	10	20 g
FR14GR69V63T	V1017193	690 V	63 A	2900 A²s	160 kA	12.5 W	617 A²s	10	20 g



FR14GR69V63

CP 14x51 gR without striker

Catalog number	Item number	Rated voltage AC (IEC)	Rated current I_n	Clearing I^2t at Rated Voltage	Rated breaking capacity AC	Power dissipation at I_n	Pre-arcing I^2t	Package	Weight
FR14GR69V1	X1017195	690 V	1 A	0.3 A²s	160 kA	1.15 W	0.2 A²s	10	20 g
FR14GR69V2	Y1017196	690 V	2 A	1.8 A²s	160 kA	1.75 W	0.9 A²s	10	20 g
FR14GR69V4	Z1017197	690 V	4 A	13 A²s	160 kA	2.9 W	6.7 A²s	10	20 g
FR14GR69V6	A1017198	690 V	6 A	35 A²s	160 kA	2 W	8 A²s	10	20 g
FR14GR69V8	B1017199	690 V	8 A	40 A²s	160 kA	2.25 W	4.3 A²s	10	20 g
FR14GR69V10	C1017200	690 V	10 A	45 A²s	160 kA	2.95 W	4.3 A²s	10	20 g
FR14GR69V12	D1017201	690 V	12 A	60 A²s	160 kA	4.1 W	5.4 A²s	10	20 g
FR14GR69V16	E1017202	690 V	16 A	125 A²s	160 kA	4.65 W	13.1 A²s	10	20 g
FR14GR69V20	F1017203	690 V	20 A	230 A²s	160 kA	4.8 W	26.8 A²s	10	20 g
FR14GR69V25	G1017204	690 V	25 A	385 A²s	160 kA	5.95 W	52.5 A²s	10	20 g
FR14GR69V32	H1017205	690 V	32 A	700 A²s	160 kA	6.9 W	96.7 A²s	10	20 g
FR14GR69V40	J1017206	690 V	40 A	1050 A²s	160 kA	7.5 W	210 A²s	10	20 g
FR14GR69V50	K1017207	690 V	50 A	2250 A²s	160 kA	8.75 W	387 A²s	10	20 g
FR14GR69V63	L1017208	690 V	63 A	2900 A²s	160 kA	12.5 W	617 A²s	10	20 g

MERSEN reserves the right to change, update or correct, without notice, any information contained in this datasheet.

TIME CURRENT CHARACTERISTIC CURVES

Size 14x51 gR 1-6A

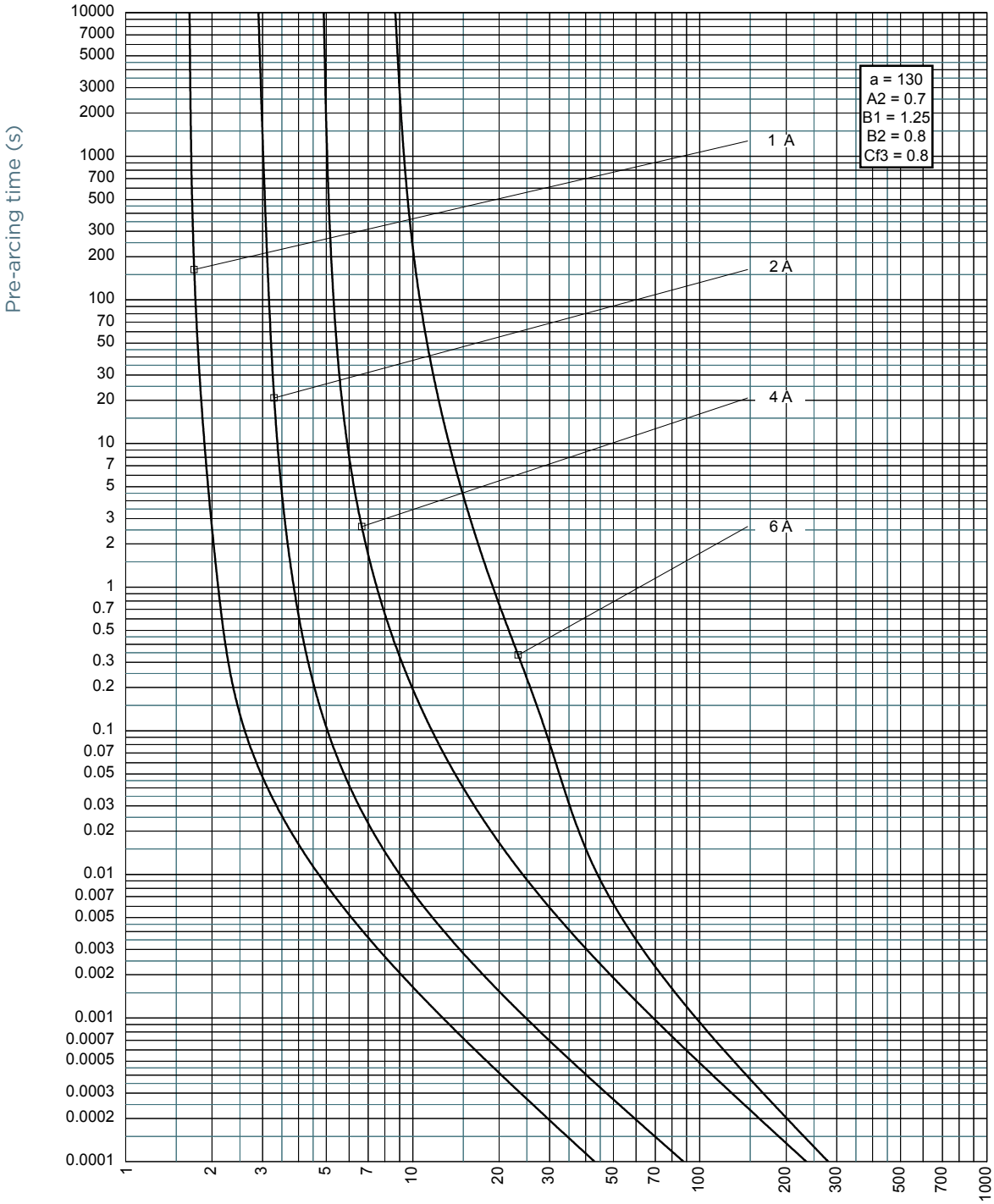

MERSEN reserves the right to change, update or correct, without notice, any information contained in this datasheet.

TIME CURRENT CHARACTERISTIC CURVES

Size 14x51 gR 8-63A

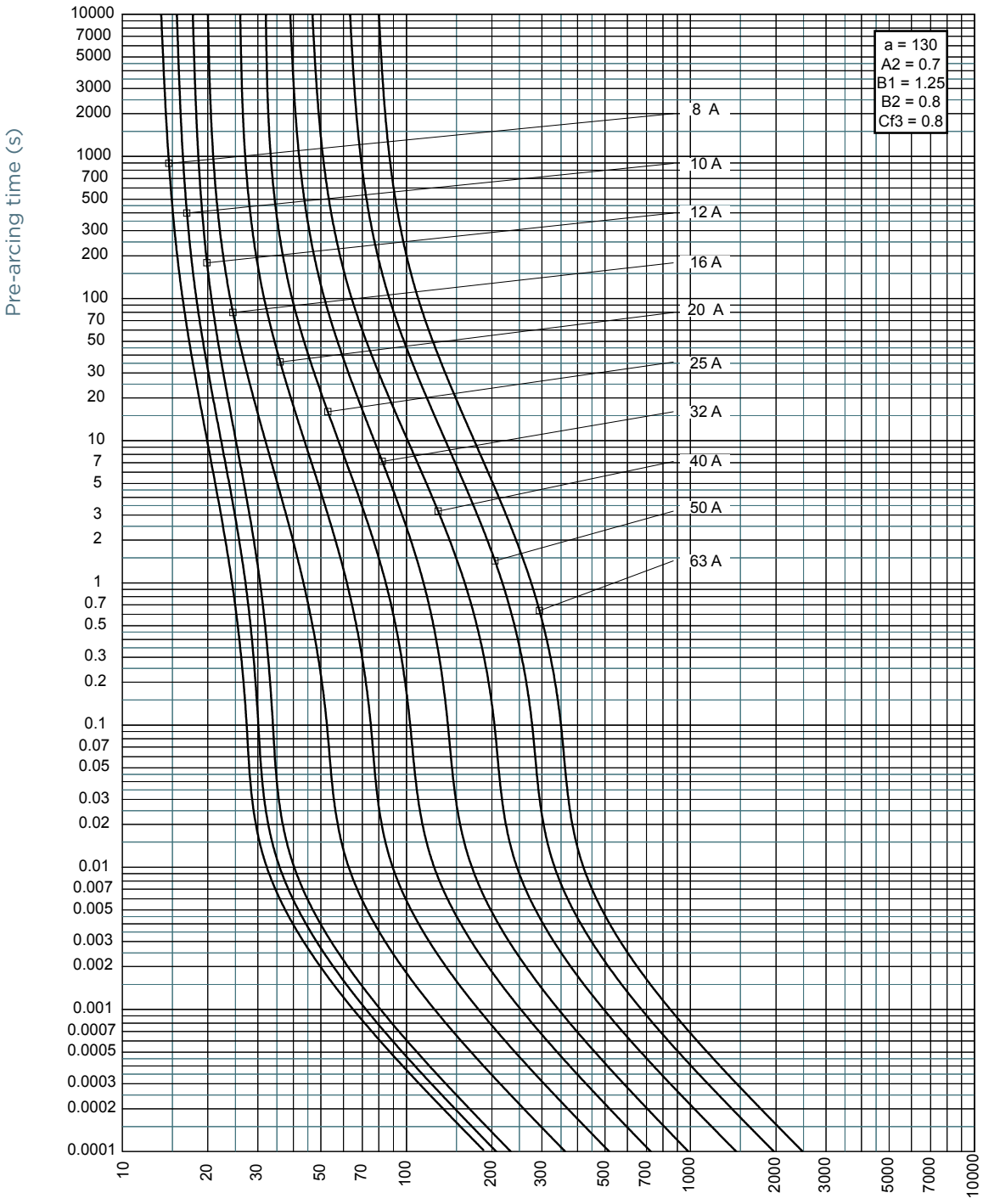

MERSEN reserves the right to change, update or correct, without notice, any information contained in this datasheet.

CUT-OFF CURRENT CHARACTERISTIC

Size 14x51 gR 1-6A

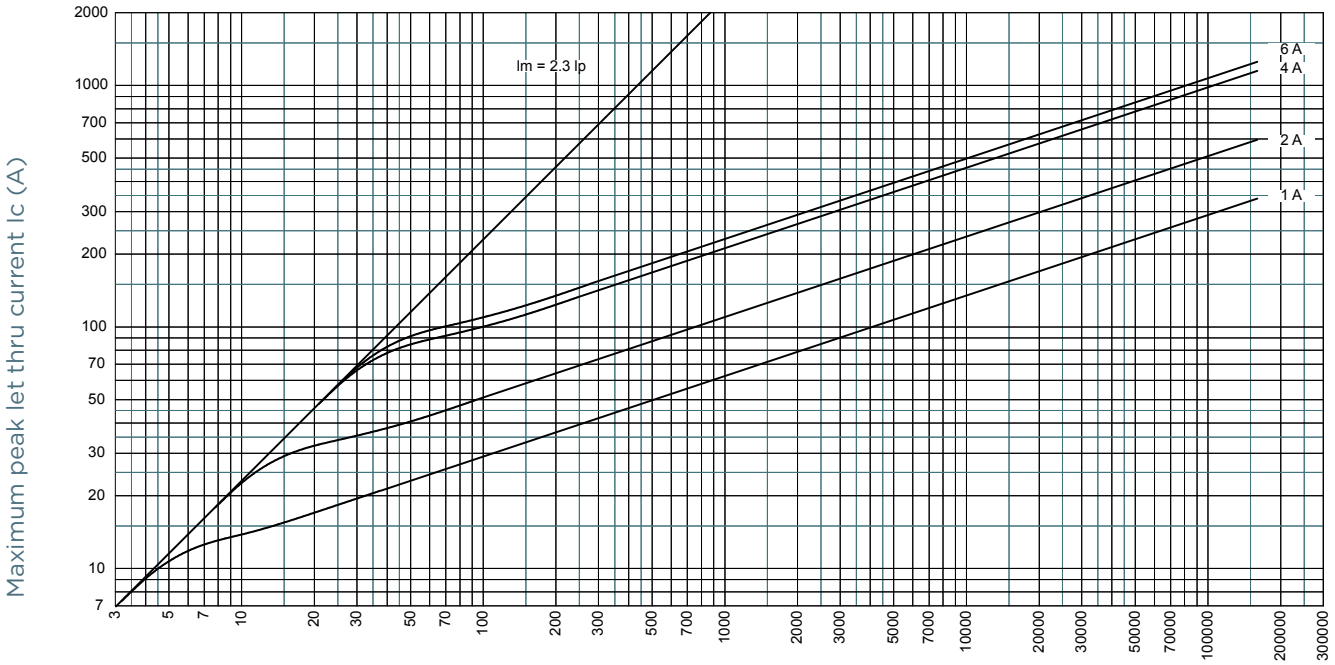

Size 14x51 gR 8-63A

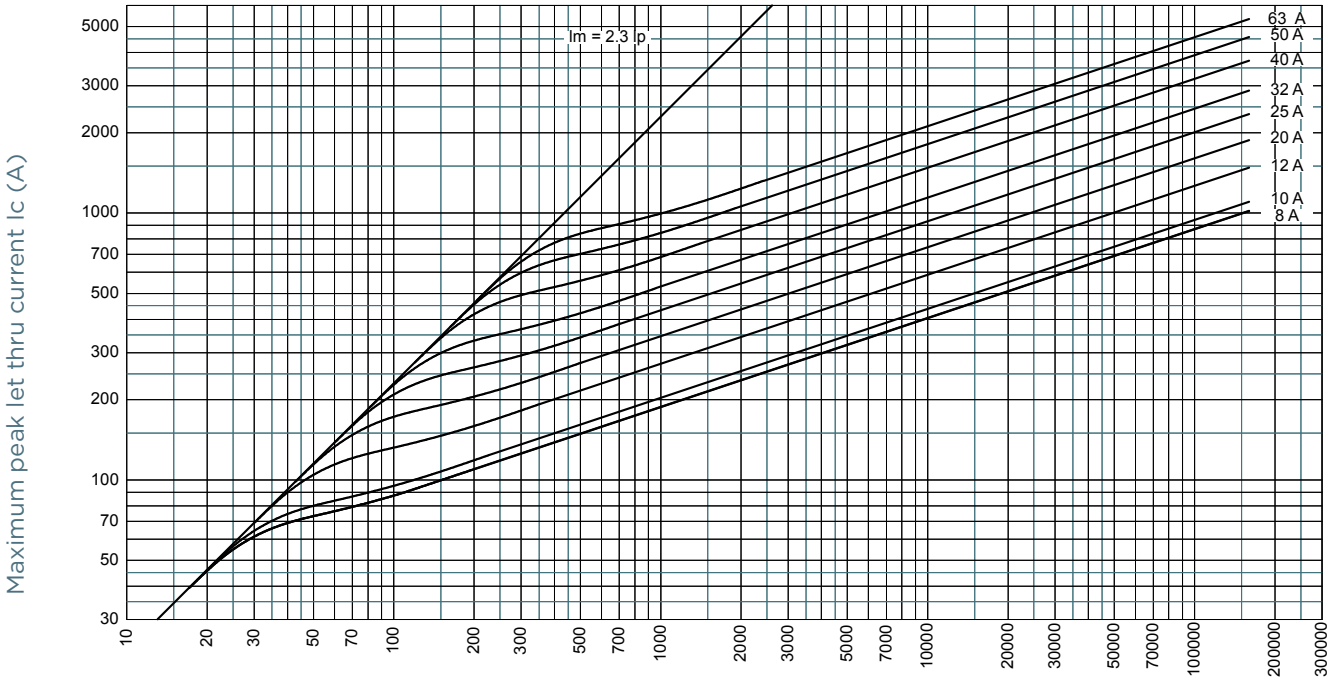

MERSEN reserves the right to change, update or correct, without notice, any information contained in this datasheet.

I^2T MULTIPLIER COEFFICIENT

Size 14x51 gR 1-6A

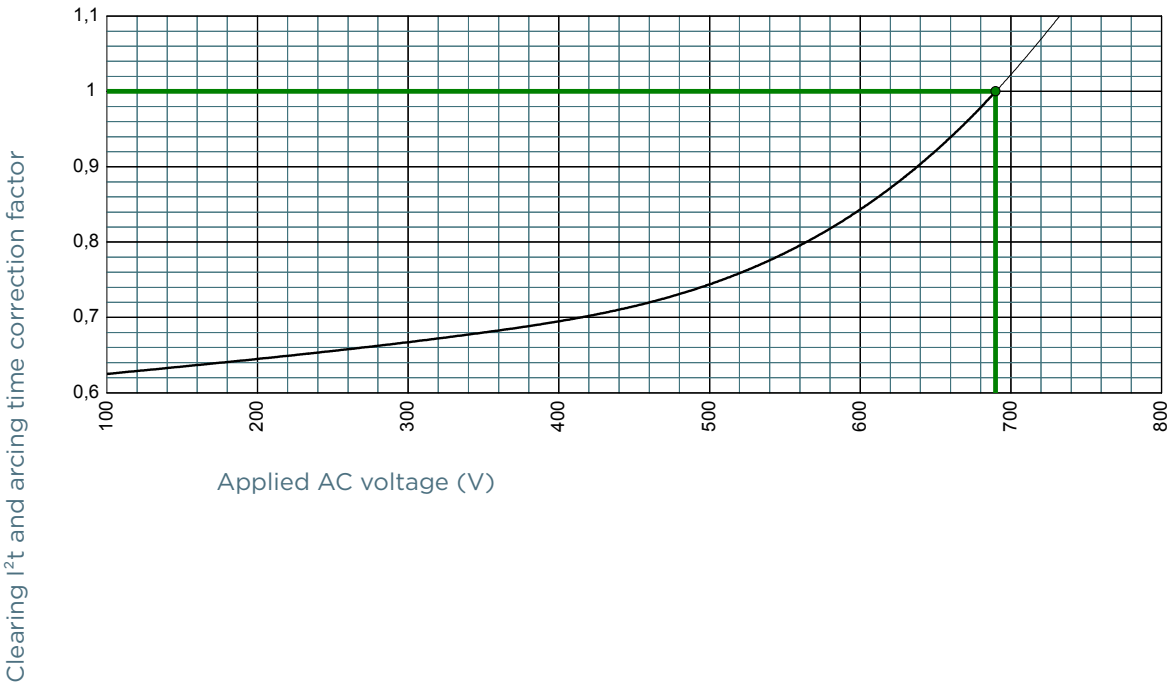

Size 14x51 gR 8-63A

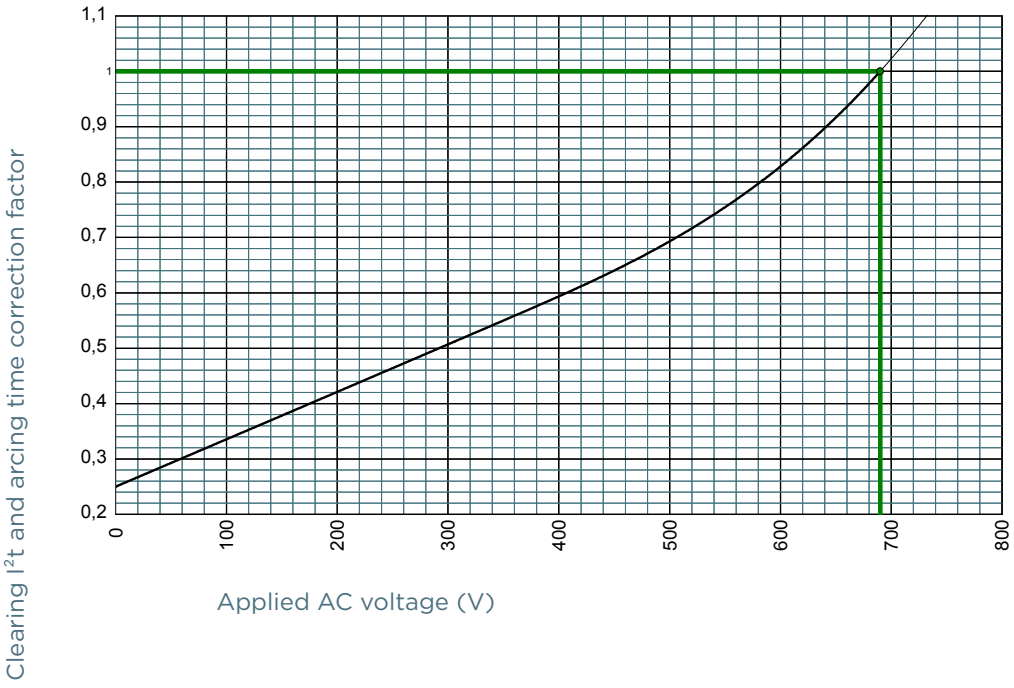

MERSEN reserves the right to change, update or correct, without notice, any information contained in this datasheet.

CHARACTERISTICS TOTAL I^2T CURVE

Size 14x51 gR 1-6A

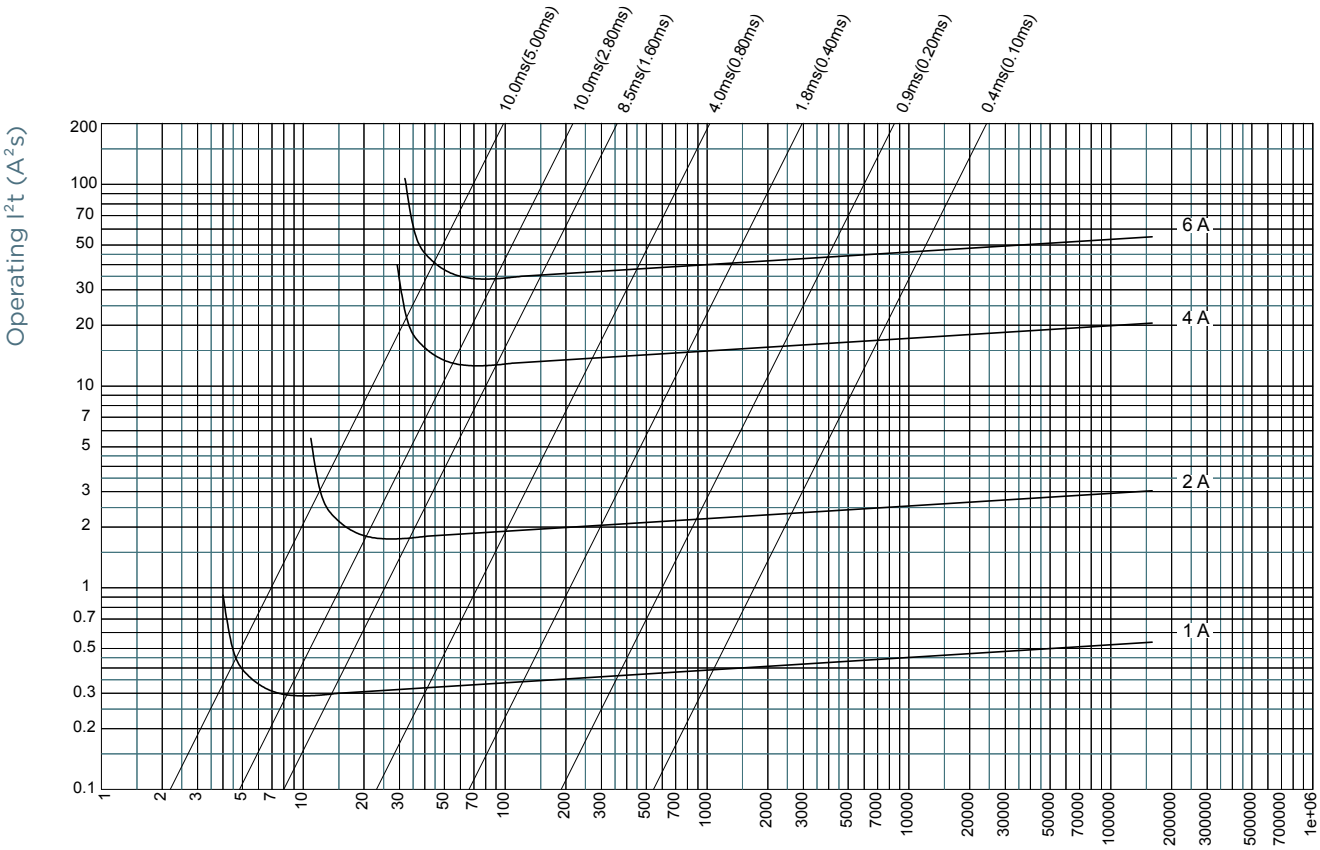

MERSEN reserves the right to change, update or correct, without notice, any information contained in this datasheet.

CHARACTERISTICS TOTAL I^2T CURVE

Size 14x51 gR 8-63A

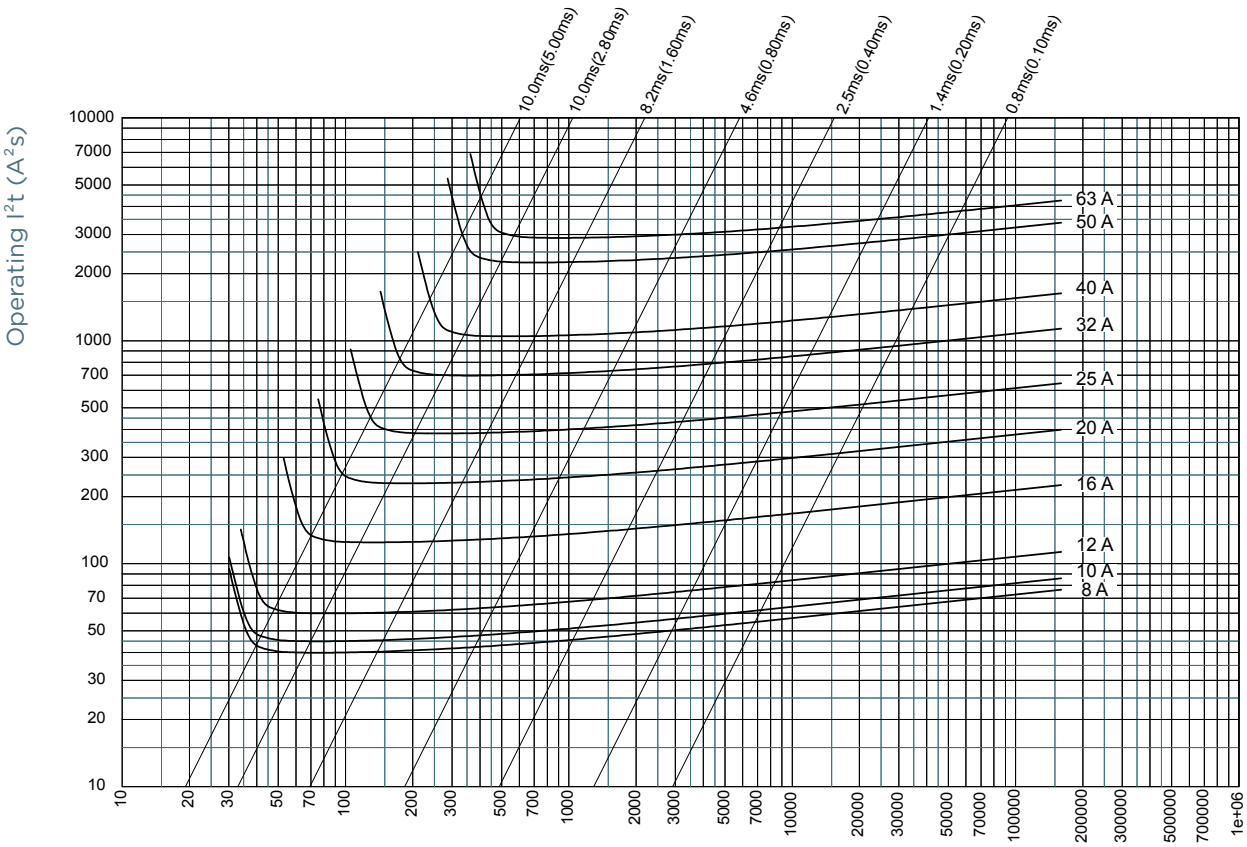

50Hz RMS symetrical prospective current (Ip)(A)

MERSEN reserves the right to change, update or correct, without notice, any information contained in this datasheet.

POWER DISSIPATION

Size 14x51 gR 1-6A

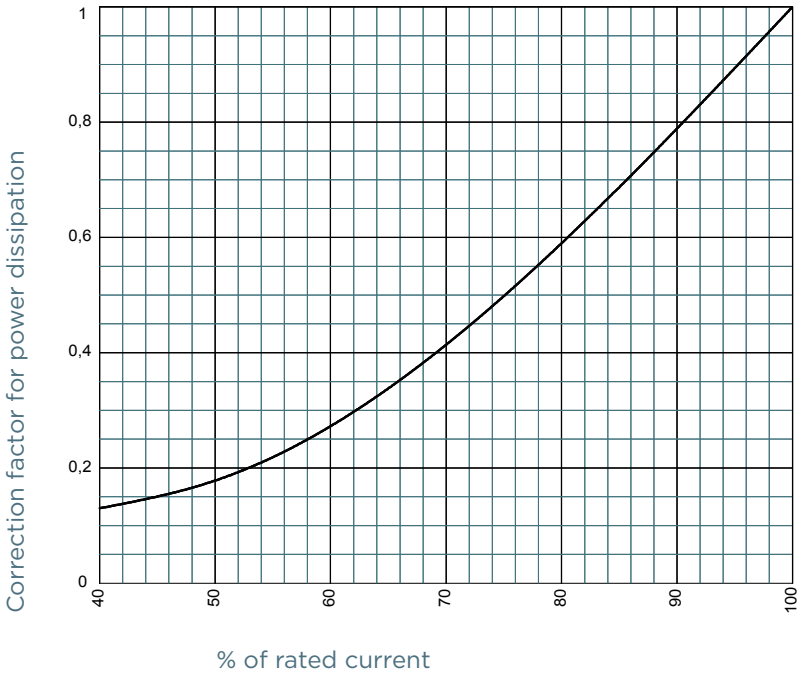

Size 14x51 gR 8-63A

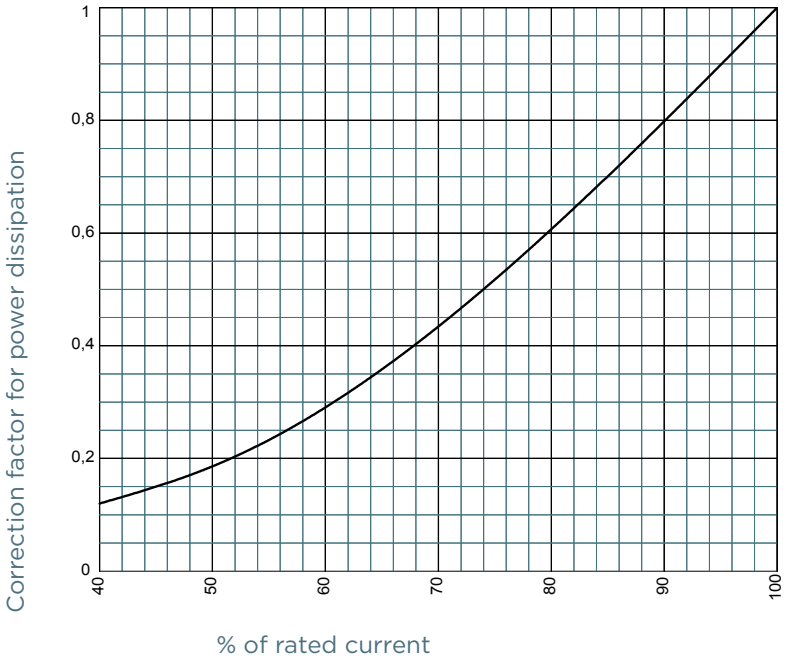

MERSEN reserves the right to change, update or correct, without notice, any information contained in this datasheet.

DIMENSIONS

CP 14x51 gR with striker (100211)

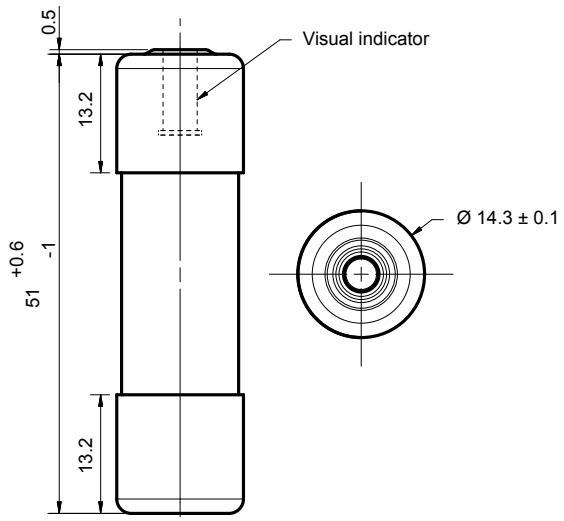

Dimensions in mm

CP 14x51 gR without striker (100212)

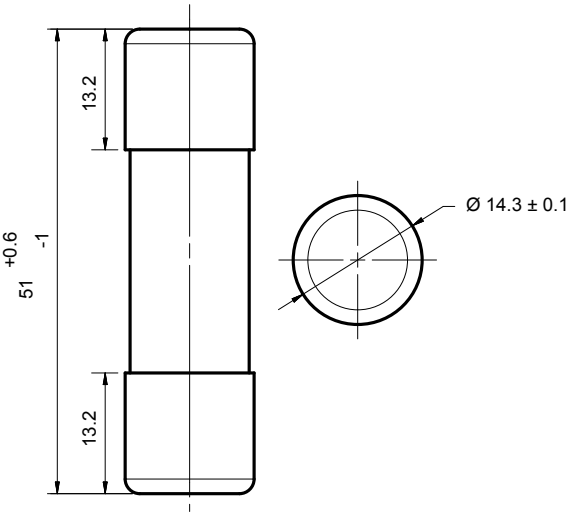

Dimensions in mm

MERSEN reserves the right to change, update or correct, without notice, any information contained in this datasheet.