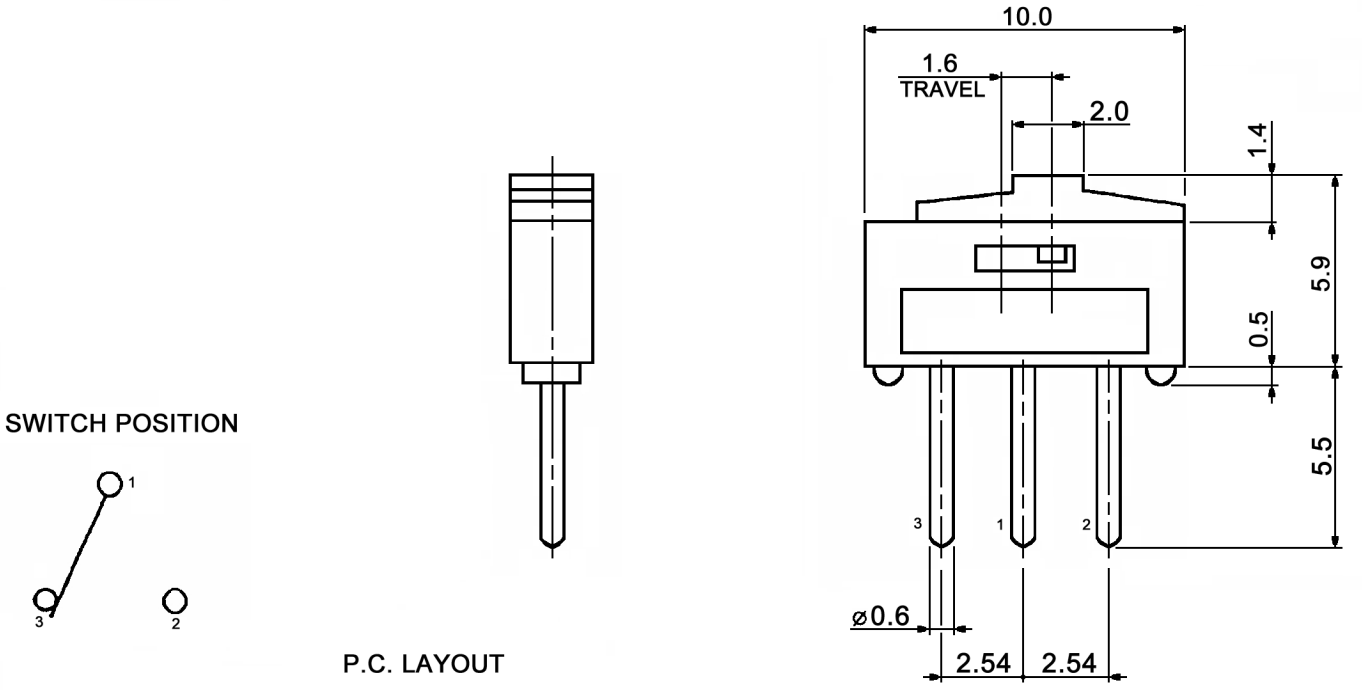

SWITCH POSITION

P.C. LAYOUT

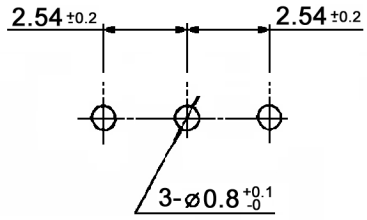

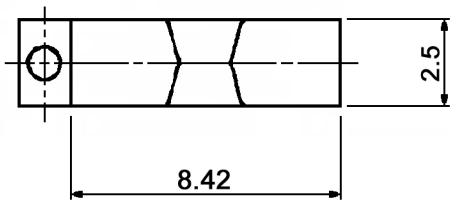

Specifications:

Contact rating:	0.5A, 12V DC; 0.3A, 24V (AC/DC) min. current: 1mA/10mV AC/DC
Contact resistance:	30mOhm max.
Insulation resistance:	10MOhm min. at 500V DC
Dielectric strength:	500V AC for 1 minute
Operating temperature:	-40°C to +85°C
Storage temperature:	-40°C to +85°C
Mechanical life:	10 000 cycles
Electrical life:	1000 cycles
Operating force:	800gf max.
Soldering conditions:	270°C, 5sec.
Humidity test:	Test conditions: measured 1hour after exposure to ambient, after 96hours exposure at 40 +/-2°C, 90-95%R.H Insulation resistance: 10MOhm min. at 500V DC Dielectric strength: 500V AC for 1 minute
Saline spray test:	24hours
Material:	Case / slide: glass fiber reinforce polyamide (UL94V-0), black Terminal and all contact parts: 0.05µm gold plated over 0.2µm nickel

x	Slider color
(empty)	red
K	black
Y	yellow

Minimum order for "K" and "Y" is 10K pcs per color

Compliance: RohS II (2011/65/EU)

Tolerances:			Date	Name
			05/06	dr
Revised	07/15	dr		
Mechanical life	04/14	dr		
Contact rating	04/13	dr		
Material	09/12	dr		
Revised	02/11	dr		
Mechanical life	07/07	dr		
Modifications	Date	Name		

MMP 1010 Dx-1

knitter-switch

30 09 03

Page 1/1