DATASHEET - M30-FI1



Surface mounting enclosure, flat, 1 mounting location, M30

Part no. M30-FI1
Catalog No. 197235

Technical data

General

Ambient temperature			
Open		°C	-25 - +70

Design verification as per IEC/EN 61439

Technical data for design verification			
Operating ambient temperature min.		°C	-25
Operating ambient temperature max.		°C	70

Technical data ETIM 7.0

Low-voltage industrial components (EG000017) / Enclosure for control circuit devices (EC000200)			
Electric engineering, automation, process control engineering / Low-voltage switch technology / Command and alarm device / Housing for command and alarm devices (ecl@ss10.0.1-27-37-12-05 [AKF023014])			
Number of command positions			1
Construction type housing			Surface mounting housing
Material housing			
Material quality housing			
Diameter openings		mm	30
Colour housing cover			
Degree of protection (IP)			
Degree of protection (NEMA)			
Width		mm	
Height		mm	
Depth		mm	

Dimensions

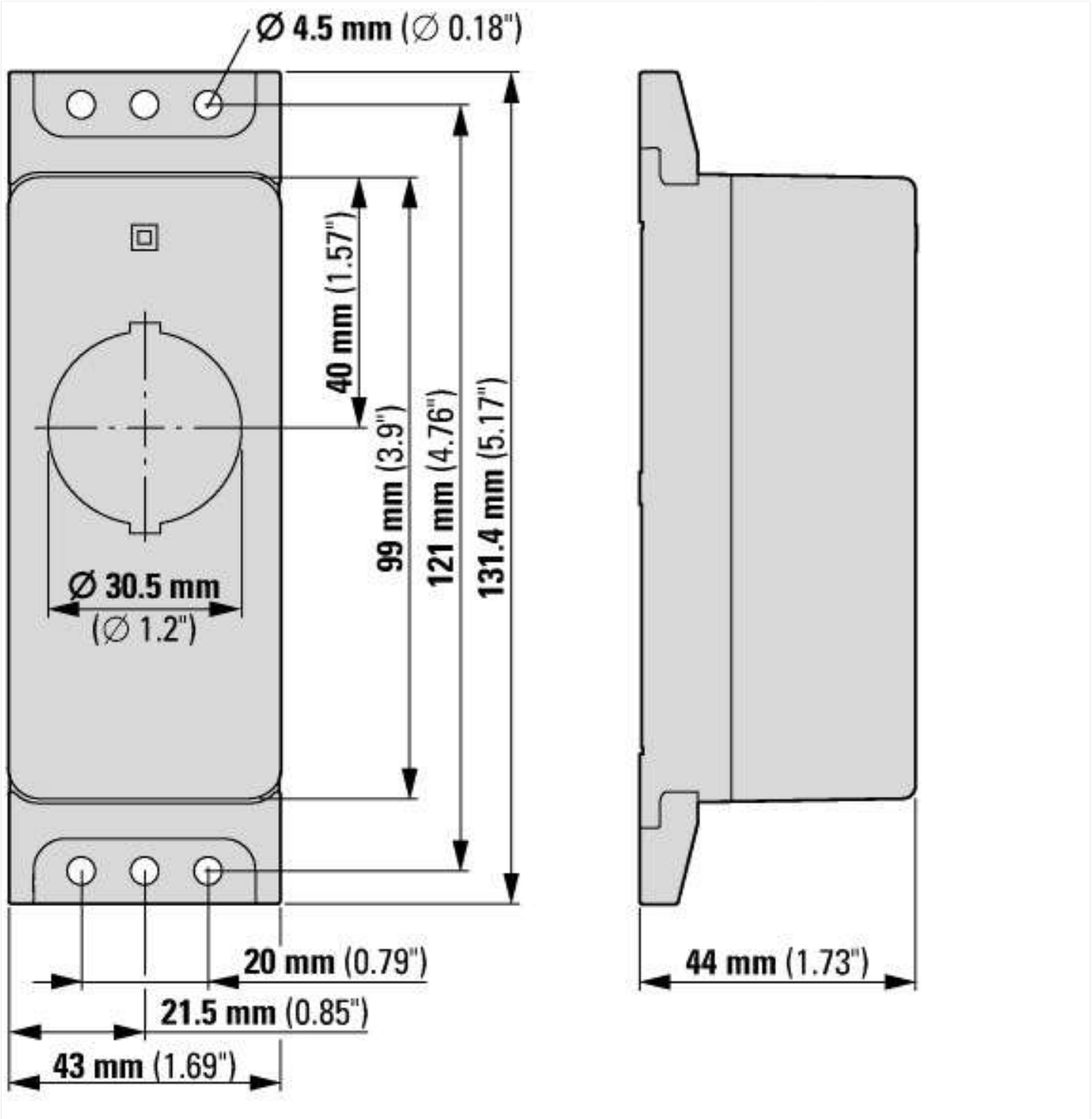
Ø 4.5 mm (Ø 0.18")
40 mm (1.57")
99 mm (3.9")
121 mm (4.76")
131.4 mm (5.17")
Ø 30.5 mm
(Ø 1.2")
20 mm (0.79")
21.5 mm (0.85")
43 mm (1.69")
44 mm (1.73")

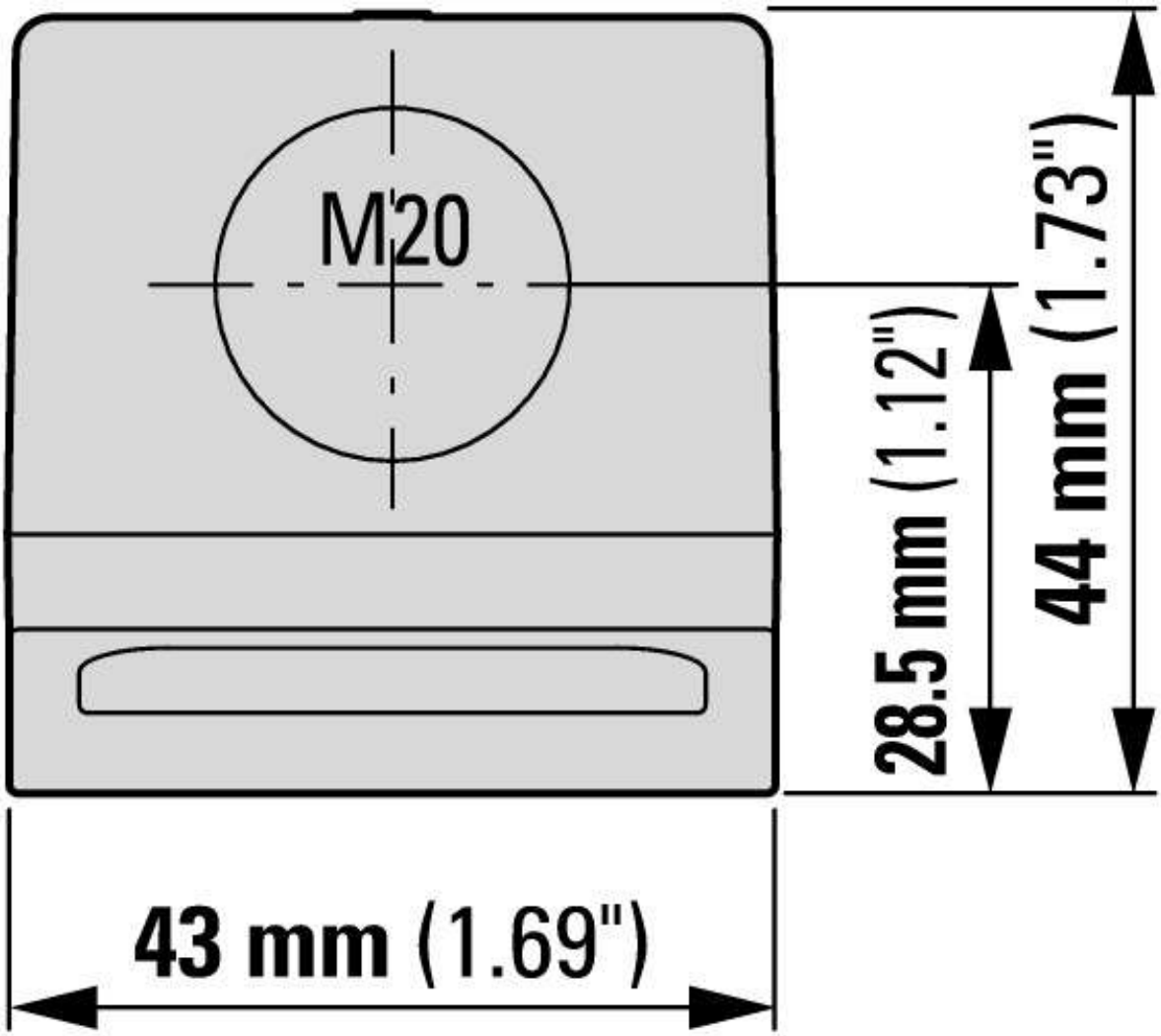

Eaton Industries GmbH
http://www.eaton.eu
© 11/2018 by Eaton Industries GmbH