DATASHEET

PULL HANDLE 40397 ZI

PICTURE

DESCRIPTION:

General purpose carrying / drawer handle
Good carrying capacity
Curved grip surface for easy carrying

FEATURES:

- Finish: Zinc Plated
- Material: Steel
- Dimensions: 146 x 46 mm
- Height: 46 mm
- Width: 146 mm
- Thickness: 1.5 mm

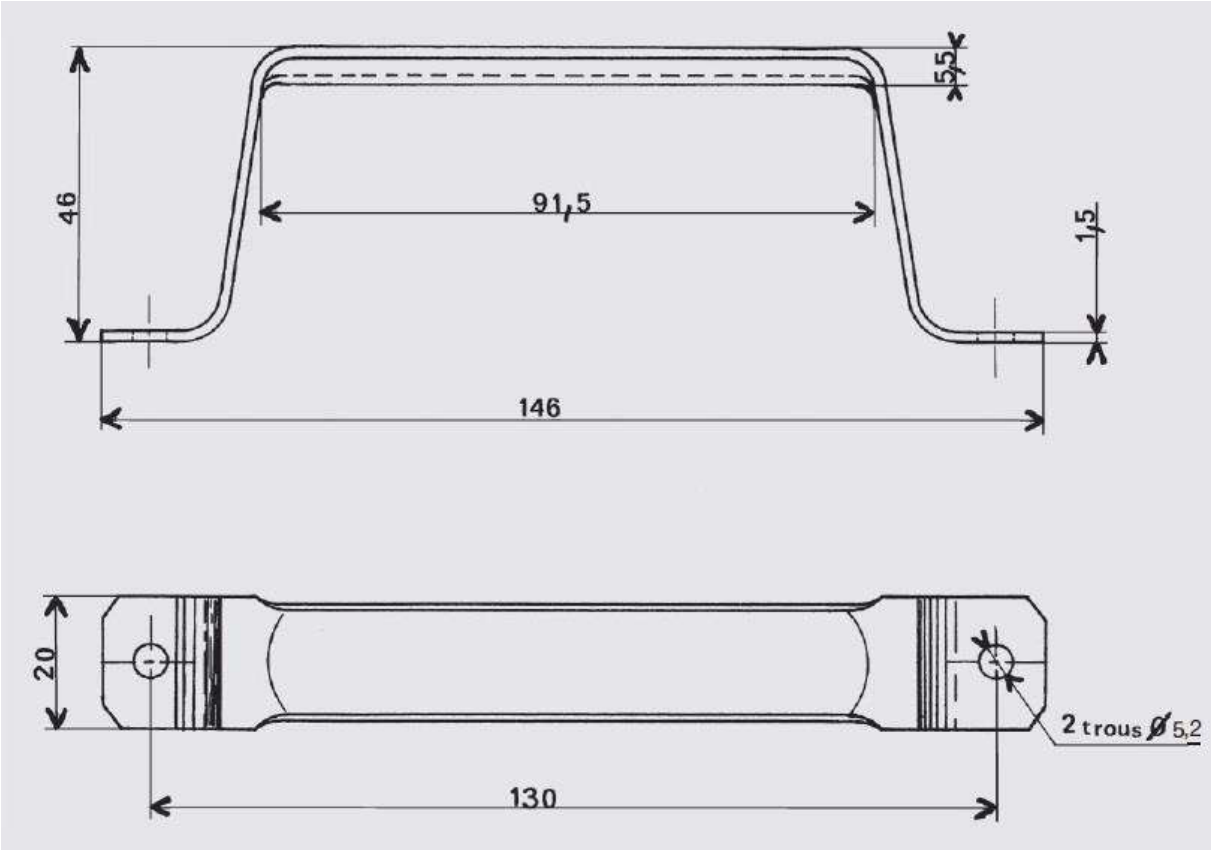
46
91,5
5,5
1,5
146
20
130
2 trous Ø 5,2