Product Specification

A040/ ... Plastic Base / Mild Steel Plated Stud

Levelling Foot Range

Materials ... **Base -**Polyamide Reinforced Nylon
Stud - Mild Steel, Plated



Part No.	Thread Size D1 (mm)	Thread Length L (mm)	Base Diameter D2 (mm)	Overall Height H (mm)	Max Load (kg)
A040 / 001	M6	20	40	41	300
A040 / 009	M6	20	50	43	300
A040 / 002	M6	40	40	61	300
A040 / 010	M6	40	50	63	300
A040 / 003	M8	25	40	46	450
A040 / 011	M8	25	50	48	450
A040 / 004	M8	40	40	61	450
A040 / 012	M8	40	50	63	450
A040 / 005	M8	60	40	81	450
A040 / 013	M8	60	50	83	450
A040 / 006	M10	38	40	59	500
A040 / 014	M10	38	50	61	500
A040 / 017	M10	60	40	81	500
A040 / 015	M10	60	50	83	500
A040 / 008	M10	75	40	96	500
A040 / 016	M10	75	50	98	500
A040 / 021	M12	50	40	76	600
A040 / 017	M12	50	50	75	600
A040 / 022	M12	75	40	98	600
A040 / 018	M12	75	50	100	600
A040 / 023	M12	100	40	123	600
A040 / 019	M12	100	50	125	600
A040 / 024	M12	125	40	148	600
A040 / 020	M12	125	50	150	600

Dimensions are approximate

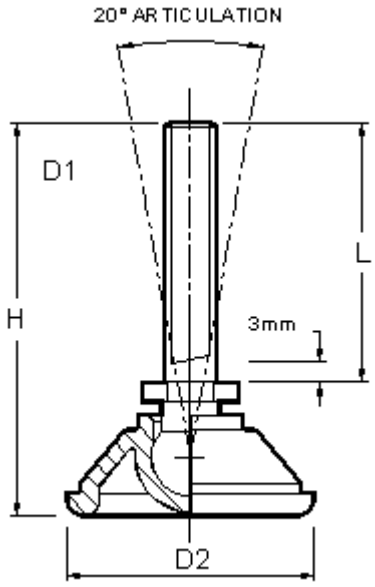

Registered Design