MK Essentials Floorbox Technical

MK Essentials Floorbox

Standards and Approvals

The MK Essentials Floorbox supports compliance with the latest edition of the IET Wiring Regulations (BS 7671) and to BS EN 50085-1 and EN 50085 Part 2-2, BS EN 60670-1 and BS EN 60670-23.

TECHNICAL SPECIFICATION

MATERIALS

PLASTIC COMPONENTS
Manufactured from ABS plastic.

METAL COMPONENTS
Manufactured from pre-galvanised steel.

RAL COLOURS
Grey (GRY) = RAL 7042

Feature benefits

- Tested to BS EN 50085-2-2 to accept 3000N load
- Flange fixings, an adjustable self-levelling ratched system and pre-cut side knockouts for a quick and easy installation
- Practical range of power and data accessory plates to support end user needs
- Features a reversible lid and tool free frame release for ease and convenience when changing floor layouts
- Quality, reliability and safety come as standard
- 5 year product guarantee

Installation

MK Essentials Floorboxes should not be installed in the following situations:

- Where the floor is subjected to washing
- Where protruding electrical cables are likely to cause a safety hazard
- In passageways, especially where trolleys or other vehicles may be used
- On escape routes, as this may impede the evacuation of the occupants from the building
- Where opening the lid may be restricted and prevent access to the floorbox: for example, never position furniture such as desks, chairs or cabinets on the floorbox

Description

The MK Essentials Floorbox is a three compartment floor outlet box for use in raised floor environments. Ideal for use in commercial offices, education faciltites or any other environment requiring underfloor access to power and/or data.





Load Testing

Load Testing of Floorboxes to BS EN 50085 Part 2-2 (Clauses 10.5.103 and 10.5.104).

The floorbox has been tested to and comply with the loading requirements of EN 50085 Part 2-2 (Cable trunking systems and cable ducting systems for electrical installations Part 2-2: Particular requirements for cable trunking systems and cable ducting systems intended for mounting underfloor, flushfloor, or onfloor).

There are two loading criteria for the floorboxes – one with a point loading to replicate foot traffic for example, and the other, with a large plate to replicate fork trucks and heavier larger loads for example. For both loading criteria the maximum allowable deflection under load is 6mm and the maximum permanent deflection after the load has been removed is 3mm.

The Lid Deflection (loading) graph shows that the maximum point loading classification achieved is 1.5kN and the maximum large plate loading classification achieved is 3kN.

The Permanent Deflection graph shows the permanent deflection from the 4 large plate loading at 3kN is 0.4mm. This is well within the maximum allowable deflection of 3.0mm. The loading position is the centre of the lid.

Lid Deflection

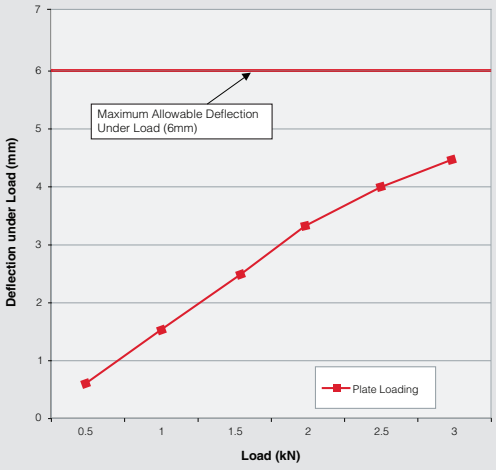

Permanent Deflection After Removal of Load

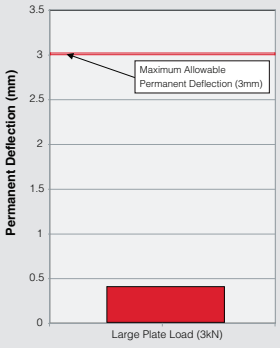

MK Essentials Floorbox Technical

Floorbox: Tile and Frame and Floor Tile Cut-Out Dimensions

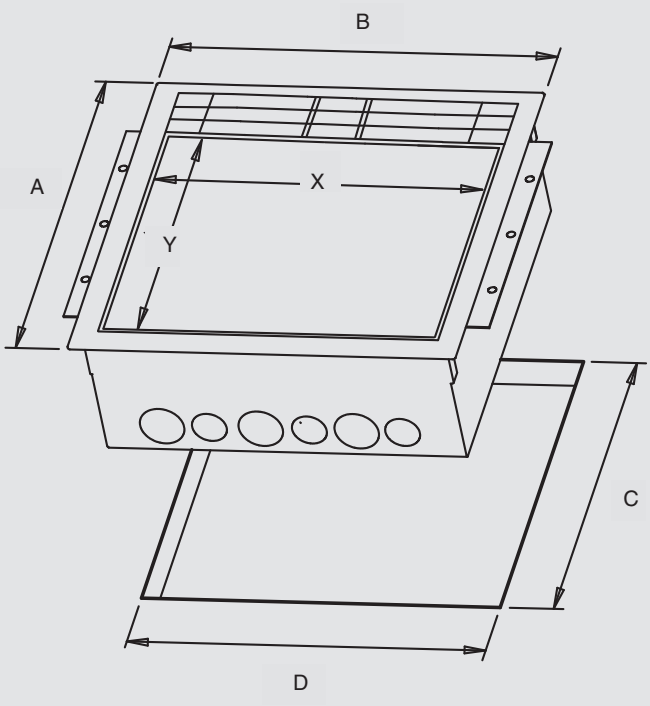

DIMENSIONS (mm)	
A	272
B	272
C*	258
D*	260

* General tolerance = +1.5mm.

The table below shows the sizes required for the carpet lid infill for MK Essentials Floorboxes.

DIMENSIONS (mm)		
	X	Y
Carpet Infill	234	202

Knockouts

The MK Essentials three compartment floorbox is supplied with 3x 25mm and 3x 20mm knockouts on two sides, 2 x 20mm and 2 x 25mm knockouts respectively per compartment.

Plate Dimensions (mm)



80mm Box

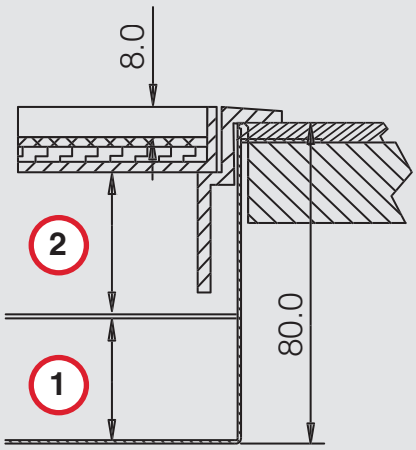

1. Wiring Space. Please see table below for dimensions.
2. This dimension assumes a floor covering thickness of 4.0mm. A thinner covering will reduce this dimension accordingly.

Plug Top Clearances

		DIMENSIONS (mm)
1	Wiring Space	32
2	Plug Top Clearance	40mm*

* Assumes a floor covering thickness of 4mm

Note: Suitable for use with Cat6 data cables, subject to compliance with cable manufacturers bending radius requirements.

Unserviced data plate: CXP20215GALV - 4 x LJU6C WAVE APERTURES - provides greater wiring space for use with Cat6 data cables.

For applications that require increased wiring space, use MK Cablelink Plus Single Pan Floorbox - CRB265UK-3GRY. (3 compartment, 95mm depth).

Dual Earth Sockets and High ~~integrity Earthing~~

Modern offices, schools, universities, laboratories etc, are heavy users of IT, computing and electronic equipment. As most of this equipment is fitted with a filter mechanism to protect data and data transmission against RFI and power surges, small earth leakages emanating from this equipment introduces a current onto the Circuit Protective Conductor (CPC) effectively turning this into a functional earth.

Should the CPC be broken, any equipment downstream of the break is no longer connected to earth. If a fault now occurs in this equipment, the CPC could rise to the mains potential and the fault transferred to other equipment on the circuit. The implicit risks to equipment, data and most importantly users in this situation are dealt with in the 18th Edition of the IET Wiring Regulations, and have led MK Electric to introduce Dual Earth Sockets.

Dual Earth Sockets allow the designer and installer to maintain the earth integrity of the system, in accordance with the 18th Edition of the IET Wiring Regulations is intended to maintain at all times the CPC to ensure safety.

Clean Earth Sockets

Clean Earth Sockets allow the designer & installer to introduce a protective conductor connecting sensitive equipment i.e. a computer, directly to the main earth.

This reduces the possibility of 'noise' occurring on the protective conductor through induced voltages from other equipment, and hence can have benefits in maintaining data and data transmission integrity.