rotronic

Datenblatt - Fiche technique - Data sheet

11.01.5618



ROLINE Tastatur-Kabel-PS/2 ST/BU, 1,8m

ROLINE Câble de clavier pour PS/2, M/F, 1,8m

ROLINE PS/2 Cable, M – F, 1.8 m

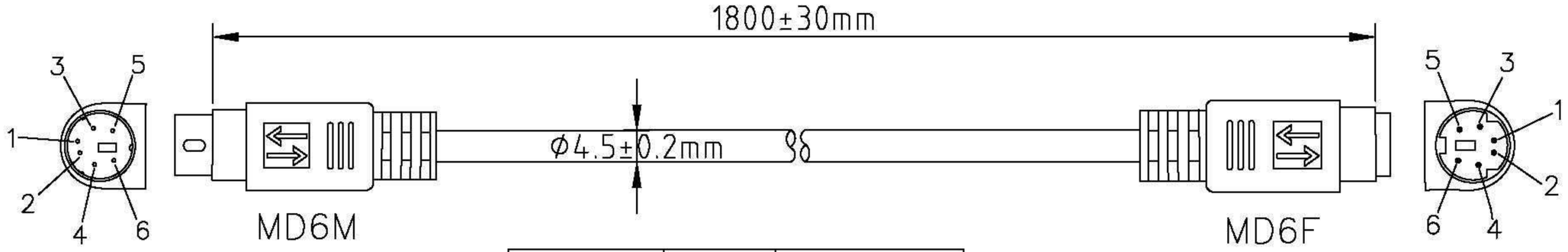

ITEM	COLOR	LENGTH
11.01.5618	BEIGE	1800±30mm
11.01.5630	BEIGE	3000±30mm
11.01.5660	BEIGE	6000±50mm

NOTE: **注:线材颜色须用RLA专用米色!!**

1. CABLE: 28AWG,NON-UL,AL-FOIL,6C+1,OD=4.5mm,BEIGE COLOR,PVC JACKET.
2. LENGTH: 1800mm
3. CONNECTORS: MD6M*1, MD6F*1(BLACK INSULATOR)
4. MOLD: **成型半圆网状模 —— 成型半圆网状模**
5. CONTACTS:

MD6M	1	2	3	4	5	6	64
MD6F	1	2	3	4	5	6	64

6. OPEN/SHORT TEST: 100% TEST.
   INSULATION: 1M.

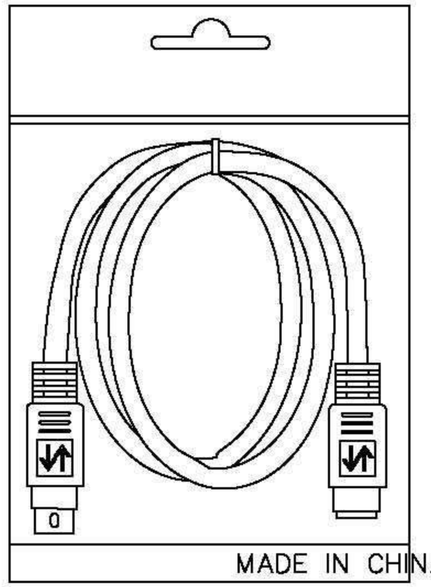

PE BAG(190*300*0.06)
1PCS/PE BAG+吊卡+條碼貼紙
須貼外箱貼紙

COMPANY	RLA		ITEM NO.	11.01.5618	NO	B3909
REVISION	DATE	DISCRIPTION	DRAWN BY			
REV.A/0	2006.05.10	C9-2509057	DESIGNED BY			
			APPROVAL BY			

Rotronic Co., Ltd.

SCALE	
UNIT(mm)	
DRAWING NO.	