EVW070

Connecting cable with socket

ADOGF030SCS0010T03

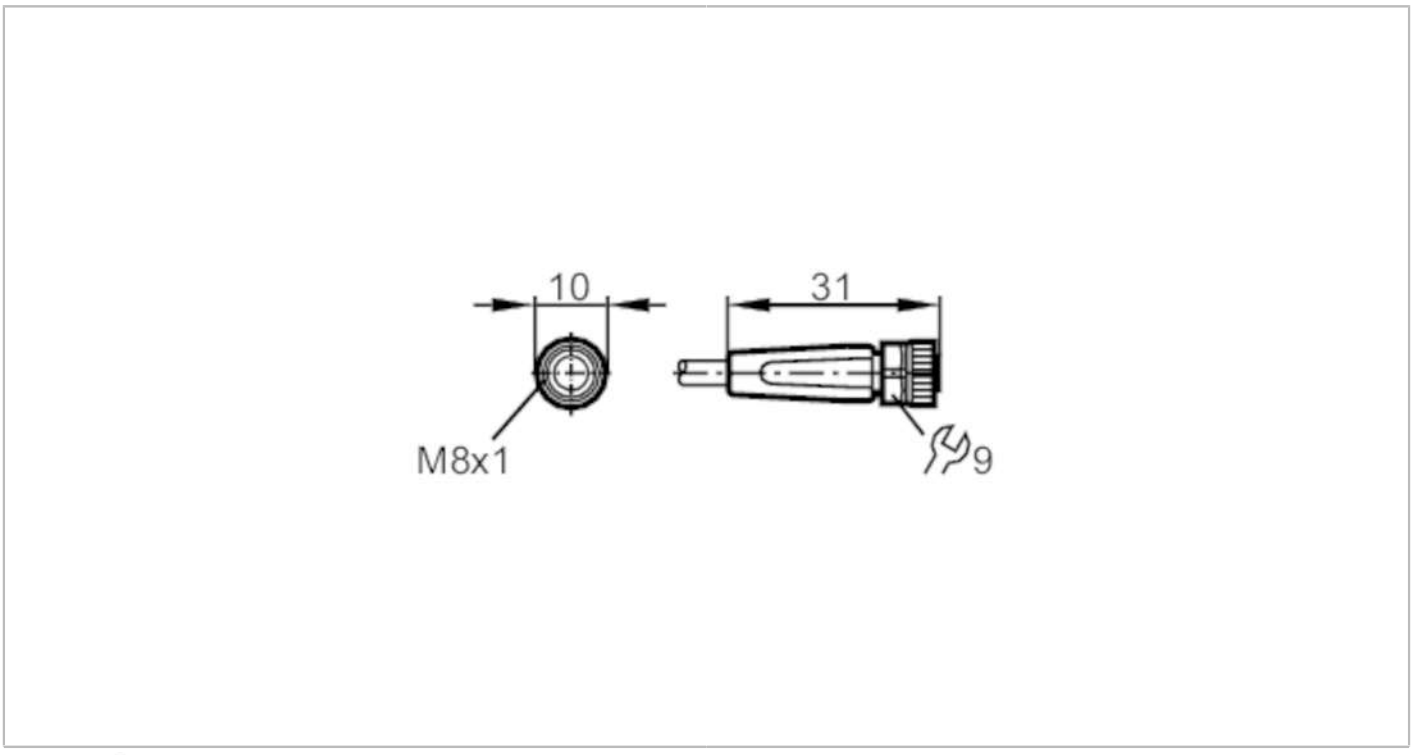

Application		
Special feature		Free from silicone; Halogen-free; Gold-plated contacts; Drag chain suitability
Application		welding applications
Free from silicone		yes
Electrical data		
Operating voltage	[V]	< 50 AC / < 60 DC
Protection class		III
Max. current load total	[A]	3
Operating conditions		
Ambient temperature	[°C]	-25...90
Note on ambient temperature		cULus: ...85
Ambient temperature (moving)	[°C]	-25...90
Note on ambient temperature (moving)		cULus: ...85
Protection		IP 65; IP 67; IP 68; IP 69K
Mechanical data		
Weight	[g]	259.2
Dimensions	[mm]	10 x 10 x 31
Materials		housing: TPU orange; Sealing: FKM
Material nut		brass, anti-spatter
Drag chain suitability		yes

EVW070

Connecting cable with socket

ADOGF030SCS0010T03

Drag chain suitability	bending radius for flexible use	min. 10 x cable diameter
	travel speed	max. 3.3 m/s for a horizontal travel length of 5 m and max. acceleration of 5 m/s²
	bending cycles	> 2 Mio.
	torsional strain	± 180 °/m

Remarks

Pack quantity	1 pcs.

Electrical connection

Cable: 10 m, PUR, Halogen-free, grey, Ø 4.5 mm; not irradiated (can be recycled); resistant to welding sparks; 3 x 0.25 mm² (32 x Ø 0.1 mm)

Electrical connection - socket

Connector: 1 x M8, straight; coding: A; Locking: brass, anti-spatter; Contacts: gold-plated; Tightening torque: 0.3...0.5 Nm

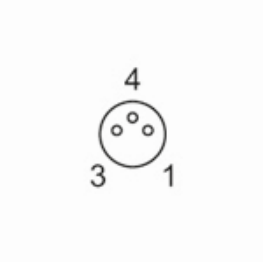

Connection

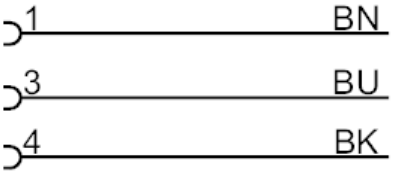

Core colours :

BK = black
BN = brown
BU = blue