SKINDICHT® SHV-M

SKINDICHT® SHV-M, robust special sealing cable gland, watertight with high strain relief, gentle cable clamping



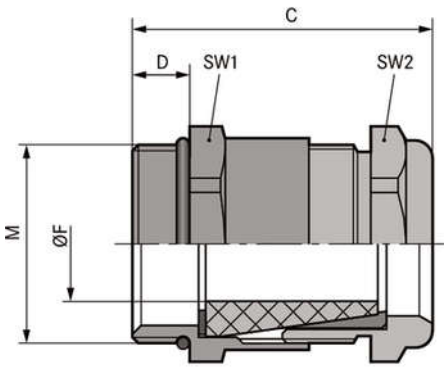

CE

Waterproof

Robust

Optimum strain relief

Benefits

Watertight
Gentle cable clamping
Robust
High strain relief

Application range

Watertight cable gland with conical sealing element.
Pumps
Floater switches

Product Make-up

Metric connection thread acc. to DIN EN 60423
Basis for technical information DIN IEC 62444

Last Update (05.07.2017)
©2017 Lapp Group - Technical changes reserved
Product Management www.lappkabel.de
You can find the current technical data in the corresponding data sheet.
PN 0456 / 02_03.16

SKINDICHT® SHV-M

Note

Counter nut to be used: SKINDICHT® SM-M
Suitable accessory: SKINDICHT® SHV sealing cones
Example description:
SHV-M 20/11/7
20 = metric connection thread
11 = PG function thread
7 = clear opening of sealing cone

Technical Data

Classification:	ETIM 5.0 Class-ID: EC000441 ETIM 5.0 Class-Description: Cable screw gland
Caution:	The installation dimensions can be found in appendix T21
Material:	Body: nickel-plated brass Sealing cone: CR O-ring: NBR
Protection rating:	IP 68 - 10 bar
Temperature range:	-20°C to +80°C

Note

Photographs are not to scale and do not represent detailed images of the respective products.
Prices are net prices without VAT and surcharges. Sale to business customers only.

©2017 Lapp Group - Technical changes reserved

LAPP GROUP

PRODUCT INFORMATION

SKINDICHT® SHV-M

Article number	Article designation / size	Clamping range ØF (mm)	Function thread PG	SW1/SW2 mm	Total length C (mm)	Thread length, D (mm)	Clear width seal
SKINDICHT® SHV-M							
52105270	M 12 x 1,5	3 - 4.8	7	14 / 14	26	5	5
52105280	M 16 x 1,5	4.5 - 5.8	9	18 / 17	26.5	5	6
52105290	M 16 x 1,5	5.5 - 6.8	9	18 / 17	26.5	5	7
52105300	M 20 x 1,5	6 - 6.8	11	22 / 20	31	6	7
52105310	M 20 x 1,5	6.5 - 8.8	11	22 / 20	31	6	9
52105320	M 20 x 1,5	6.5 - 8.8	13.5	22 / 22	32.5	6	9
52105330	M 20 x 1,5	9 - 10.8	13.5	22 / 22	32.5	6	11
52105340	M 20 x 1,5	9 - 10.8	16	24 / 24	34.5	6	11
52105350	M 20 x 1,5	9.5 - 12.8	16	24 / 24	34.5	6	13
52105360	M 20 x 1,5	13 - 14.8	16	24 / 24	34.5	6	15
52105370	M 25 x 1,5	13.5 - 15.8	21	30 / 30	38.5	7	16
52105380	M 25 x 1,5	15 - 17.8	21	30 / 30	38.5	7	18
52105390	M 25 x 1,5	17.5 - 19.8	21	30 / 30	38.5	7	20
52105400	M 32 x 1,5	17.5 - 21.8	29	40 / 40	42.5	8	22
52105410	M 32 x 1,5	19 - 23.8	29	40 / 40	42.5	8	24
52105420	M 32 x 1,5	23 - 25.8	29	40 / 40	42.5	8	26

Last Update (05.07.2017)
©2017 Lapp Group - Technical changes reserved
Product Management www.lappkabel.de
You can find the current technical data in the corresponding data sheet.
PN 0456 / 02_03.16