M9H207

Pressure-resistant position sensor for hydraulic cylinders

M9K3002BBPKG/B/AM/500/US

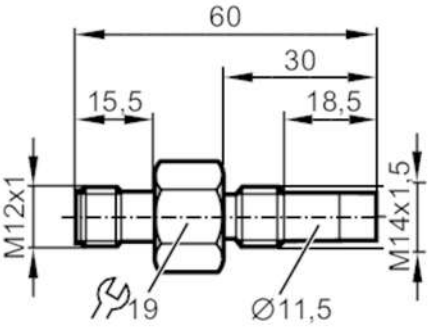

Product characteristics			
Electrical design			PNP
Output function			normally open
Sensing range	[mm]		2
Housing			threaded type
Dimensions	[mm]		M14 x 1.5 / L = 53
Application			
Special feature			Gold-plated contacts; Full-metal housing
Application			hydraulic cylinders
Media			detects ferrous metals
Min. bursting pressure	[bar]		2000
Pressure rating		dynamic [bar]	500
		static [bar]	1000
Electrical data			
Operating voltage	[V]		10...36 DC
Rated insulation voltage	[V]		60
Current consumption	[mA]		< 23
Protection class			III
Reverse polarity protection			yes
Power-on delay time	[s]		< 300
Outputs			
Electrical design			PNP
Output function			normally open
Max. voltage drop switching output DC	[V]		1.6
Max. leakage current	[mA]		0.1
Permanent current rating of switching output DC	[mA]		200
Short-time current rating of switching output	[mA]		200
Switching frequency DC	[Hz]		1000
Type of short-circuit protection			pulsed

M9H207

Pressure-resistant position sensor for hydraulic cylinders

M9K3002BBPKG/B/AM/500/US

Short-circuit proof			yes
Overload protection			yes
Detection zone			
Sensing range	[mm]		2
Real sensing range Sr	[mm]		2 ± 10 %
Operating distance	[mm]		0...1.62
Accuracy / deviations			
Hysteresis	[% of Sr]		< 15
Switch point drift	[% of Sr]		-10...10
Repeatability	[% of Sr]		< 10
Operating conditions			
Ambient temperature	[°C]		120
Protection			IP 65; IP 68; IP 69K
Tests / approvals			
EMC		EN 61000-4-2 ESD	4 kV CD / 8 kV AD
		EN 61000-4-3 HF radiated	10 V/m
		EN 61000-4-4 Burst	2 kV
		EN 61000-4-6 HF conducted	10 V
		EN 55011	class B
		DIN ISO 11452-5	100 V/m
Vibration resistance		EN 60068-2-6 Fc	20 g 50 sweep cycles, 1 octave per minute, in 3 axes / 10...3000 Hz -20...50 °C
Shock resistance		EN 60068-2-27 Ea	100 g 11 ms half-sine; 3 shocks each in every direction of the 3 coordinate axes / -40...85 °C
Fast temperature change		EN 60068-2-14 Na	TA = -40°C; TB = 85°C; t1 = 30 min; t2 = < 10 s 50 cycles
MTTF	[years]		1701
Mechanical data			
Weight	[g]		54.8
Housing			threaded type
Mounting			flush mountable
Dimensions	[mm]		M14 x 1.5 / L = 53
Thread designation			M14 x 1.5
Materials			housing: stainless steel (1.4404 / 316L); sensing face: stainless steel (1.4404 / 316L); O-ring: FPM 90
Tightening torque	[Nm]		< 25
Full-metal housing			yes
Remarks			
Pack quantity			1 pcs.

M9H207

Pressure-resistant position sensor for hydraulic cylinders

M9K3002BBPKG/B/AM/500/US

Electrical connection - plug

Connector: 1 x M12; coding: A; Moulded body: PEI; Contacts: gold-plated

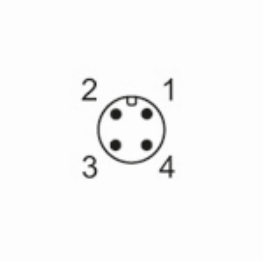

Connection

