11BGX1004

Auxiliary contact, screw terminals, for BG... series mini-contactors, 4NC



Dimensions

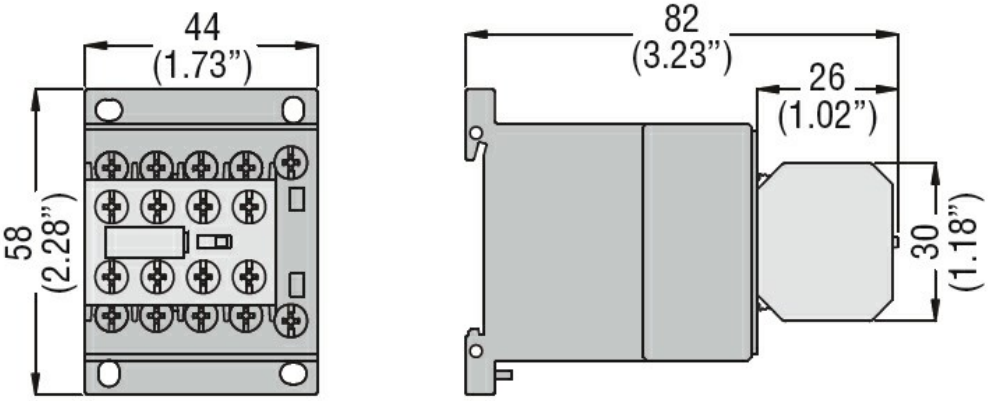

Wiring diagrams

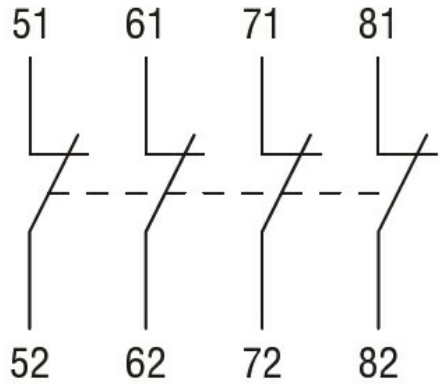

Certifications and compliance

Compliance

CSA C22.2 n° 60947-1
CSA C22.2 n° 60947-5-1
IEC/EN 60947-1
IEC/EN 60947-5-1
UL 60947-1
UL 60947-5-1

Certificates

CCC
cULus
EAC

ETIM classification

ETIM 8.0	EC000041 - Auxiliary contact block

The characteristics described in this document are subject to updates or modifications at any time. The descriptions, technical and functional information, illustrations and instructions in this brochure are purely illustrative, and are consequently not contractually binding