MOFLASH SIGNALLING

INSTALLATION INFORMATION

PLEASE READ PRIOR TO INSTALLATION



LED100 ECO Series

VISUAL SIGNALLING DEVICE

S00589 - ISSUE 1

EN Translations & Documentation, scan **QR Code**
FR Traductions & Documentation, scannez le **QR Code**
DE Übersetzungen & Dokumentation, **QR-Code** scannen
IT Traduzioni & Documentazione, scansionare il **QR code**
ES Traducciones & Documentación, escanear **QR code**

APPROVALS AND CONFORMITIES

www.moflash.com

technical@moflash.co.uk

General Installation Notes

- Installation must be carried out in accordance with the latest codes and regulations by a qualified electrician.
- Ensure power is disconnected prior to installation or maintenance to avoid danger of electrical shock.
- Environmental exposure conditions during installation should be dry. Moist or wet conditions should be avoided.
- The Lens of the product is Polycarbonate plastic. Do not clean with petroleum-based cleaners.
- For all installations, mount the Beacon ensuring the Lens is above the Base. Any other mounting positions will impair the IP Rating (Ingress Protection) of the Beacon.
- Avoid mounting the Beacon where it will be subjected to excessive vibration.

Installation Instructions

If the product is supplied with the Lens pre-fitted, remove the two M4 screws that secure the Lens to the Base. Once the Lens has been removed, remove the two screws that hold the LED PCB assembly in place and carefully remove the PCB assembly.

Insert power cables through the aperture in the Base and make the necessary connections to the Terminal Block according to the control functionality required **(see Wiring Diagrams 1 & 2)**.
Place the PCB assembly back onto the Base noting the position of the internal mounting lugs. Secure the PCB onto the lugs using the two screws removed earlier.

Secure the Base to the required surface using two M4 screws (not supplied) whilst ensuring the Gasket that's provided is also used (the Gasket should be positioned to the underside of the Base) Next, ensure the Base 'O' Ring is in position and then re-fit the Lens to the Base.

Secure the Lens to the Base with the two screws removed earlier, ensuring the screws are **tightened fully** and that a good all-round seal is made between the Base and the Lens.

Cabling Details

- Cable up to 5.8mm in diameter is accepted
- Base aperture can be enlarged to accept larger diameters.
- Maximum 1.5mm^2 (14 – 22 AWG) stranded core with 4mm cut back.

Cable Connections

The ECO range has been designed to offer two stage alarm functionality. A Jumper Link on the PCB **(see Wiring Diagrams 1 & 2)** pre-sets the product to either Static Mode (permanently on) or Flashing Mode once the unit is energized.
Please note, with the Jumper Link in place, the product is in Flash Mode only. With the Jumper Link removed, the product is in Static Mode.

An additional third wire option on the Terminal Block (SIG), once triggered, can switch the Beacon into Flash Mode **(see Wiring Diagrams 1 & 2).**

If you wish to utilise the third wire option, please ensure the Jumper Link is removed.

Wiring Diagram

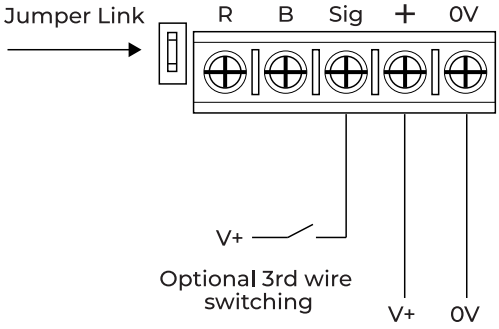

Wiring Diagram 1 (DC)

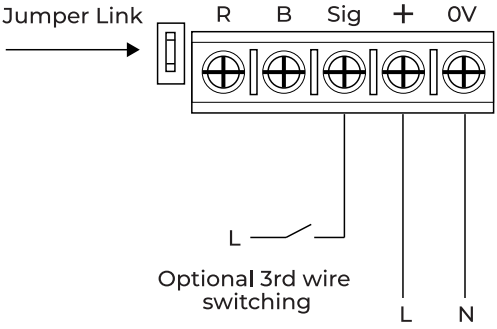

Wiring Diagram 2 (AC)

Moflash Signalling Limited accepts no liability for any consequences following use of this document. Any technical specifications and products referred to within this document are subject to change without notice due to continual improvement and product development policies. All dB(A) figures are subject to environmental conditions. The units are sold under Moflash standard conditions of sale, available on request. Additional resources, including installation sheet translations, certificates and DoCs are available from the **www.moflash.co.uk** website**.**