ELECTRICAL/MECHANICAL **BUZZERS**



FLE 14802 / 14806



Recess and waterproofing box 14555K

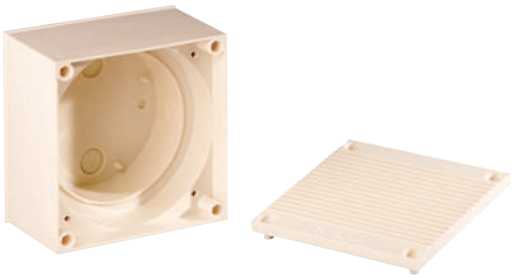

Surface mounted weatherproof box 14704K

Acoustic Signals Industrial Buzzers > **FLE**

Product overview

The AE95 series are electrical/mechanical buzzers suitable for a wide range industrial signalling applications where a low frequency and penetrating audible signal is required.

The units offer a single stage alarm, once energised an electromagnet causes the diaphragm to vibrate creating a unique acoustic tone.

They can also be pulsed via a remote source (ie control panel/plc etc) to give an intermittent signal if required.

The AE95 can also be used in automotive applications (reversing alarm/forklift trucks etc) and has an optional back box that will be required for weatherproof applications which allows for termination inside the protected enclosure.

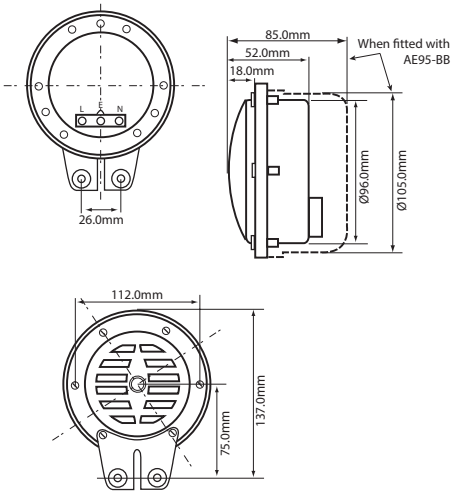

FLE > Ordering Information

Code No:	Voltage:	Frequency:	Current:
FLE			
14802	24/48v Ac/Dc ⎓	420 Hz	0.75mA
14806	110/220v Ac/Dc ⎓	420 Hz	0.13mA
AE95-07 •	24/48v Ac/Dc ⎓	420 Hz	0.75 mA
AE95-08 •	115/230v Ac/Dc ⎓	420 Hz	0.13 mA

• Fitted with a Weatherproof back box (ref 14555K)

No. Code	Accessories	IP
14555K	Recess and waterproofing box	65
14704K	Surface-mounted weatherproof box	65

Features

- Multi-purpose alarm
- Sound output 115dB at 1m
- Wide voltage range (24/48v - 110/220v)
- Loud low frequency sound
- Protection against corrosive environments and salinity
- Dustproof and Weatherproof

Material

FLE: Powder Coated Mild Steel

Recess box: Black ABS with cable gland

Surface box Beige ABS case with cable gland

Kg 0.68

420 **Hz**

°C -40 to +80

IP 55 14802 14806

IP 65 AE95-07 AE95-08

dB 115

L 120 x H 137 x P 52mm

ON 15 MIN OFF 1 MIN

INDUSTRIAL

APPROVALS and CONFORMITIES

RoHS