PyroMini OEM

Low-Cost Pyrometer for Machine Manufacturers



Model shown has 2-wire 4-20 mA output

- Miniature sensing head withstands up to 120°C ambient temperature without cooling
- Measurement ranges from -20°C to 500°C
- Choice of outputs: 4-20 mA, 0-10 V DC, Type J or K thermocouple
- Right-angled cable entry for low-profile installations
- Optional mounting brackets, air purge collar and laser sighting tool
- High accuracy and stability
- Stainless steel sensing head, sealed to IP65
- Precision optics
- Fixed emissivity 0.95 - suitable for measuring most non-reflective non-metals, and painted surfaces

GENERAL SPECIFICATIONS

Temperature Range

-20°C to 100°C (LT models)
0°C to 250°C (MT models)
0°C to 500°C (HT models)

Output

Choice of outputs:
4-20 mA, 2-wire, loop-powered, linear with temperature,
0-10 V DC, linear with temperature,
Type J Thermocouple,
Type K Thermocouple

Field of View	Choice of options (see Optics)
Accuracy	± 1°C or 1%, whichever is greater
Repeatability	± 0.5°C or 0.5%, whichever is greater
Emissivity Setting	Fixed at 0.95
Response Time	240 ms (90% response)
Spectral Range	8 to 14 µm

ELECTRICAL

Supply Voltage	24 V DC (28 V DC max)
Minimum Sensor Voltage	12 V DC (0-10 V DC model) 8 V DC (all other models)
Maximum Current Draw	20 mA (normal use) 22 mA (fault condition)
Maximum Loop Impedance	900 Ω (4-20 mA models)

MECHANICAL

	Sensing head	Electronics Module
Construction	Stainless Steel 316	Extruded Aluminium
Lens	Silicon	-
Major Dimensions	Ø18 x 55 mm (see diagram)	25(w) x 25(h) x 105(l) mm (see diagram)
Mounting	M16 x 1 mm thread	4 Mounting Holes M3 Clearance

Sensing Head Cable Length 3 m

Output Cable Length 1 m (extended cable available, 30 m max)

ENVIRONMENTAL

	Sensing head	Electronics Module
Environmental Rating	IP65	IP50
Ambient Temperature Range	0°C to 120°C	0°C to 70°C
Relative Humidity	Maximum 95% non-condensing	Maximum 95% non-condensing

CE Marked Yes

RoHS Compliant Yes

ELECTROMAGNETIC COMPATIBILITY STANDARDS

Class	Standard	Description
EMC Directive	EN61326-1:2013	Electrical equipment for measurement, control and laboratory use **– Industrial**
- Immunity	IEC 61000-4-2	Electrostatic Discharge Immunity
	IEC 61000-4-3	Radiated RF Field Immunity
	IEC 61000-4-4	Burst Immunity
	IEC 61000-4-6	Conducted RF Immunity
- Emissions	EN 55022A	RF Emissions Class A
	EN 55022B	RF Emissions Class B

CALEX ELECTRONICS LIMITED

OPTICS

Diameter of target spot measured vs. distance from sensing head (90% energy)
Note: Sensors can measure at longer distances than shown, with a larger measured spot size

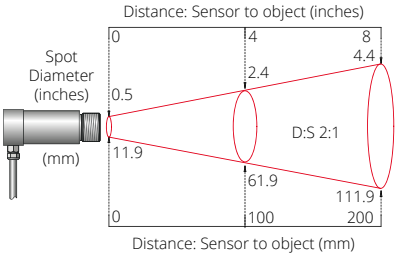

-21 models

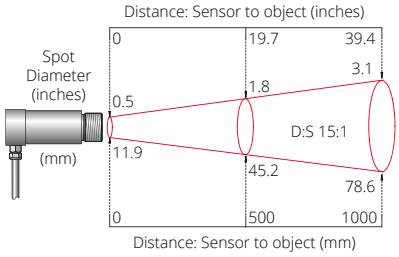

-151 models

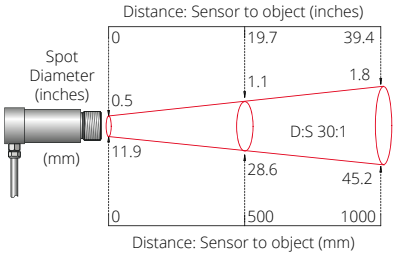

-301 models

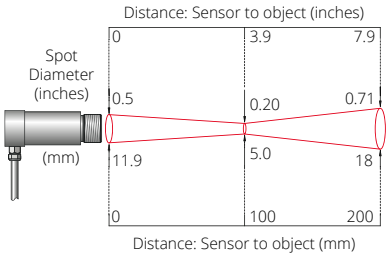

-CF models

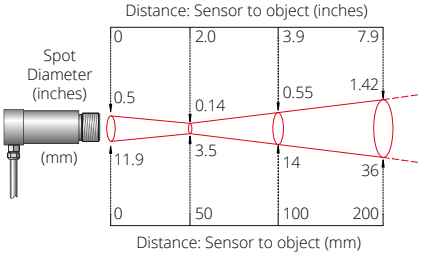

-XCF models

DIMENSIONS

Electronics Module

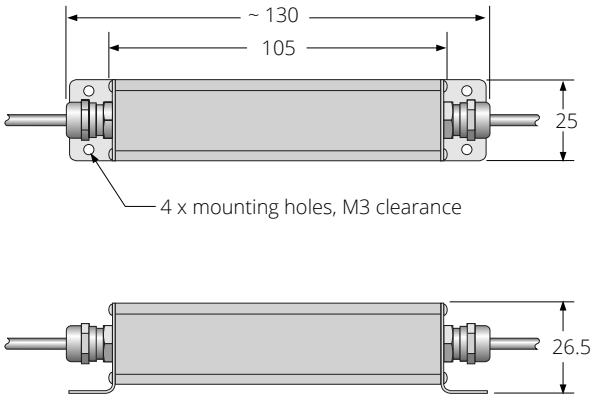

Sensing Head

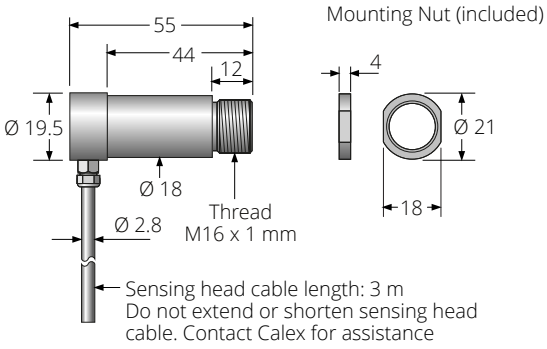

Air Purge Collar (Optional)

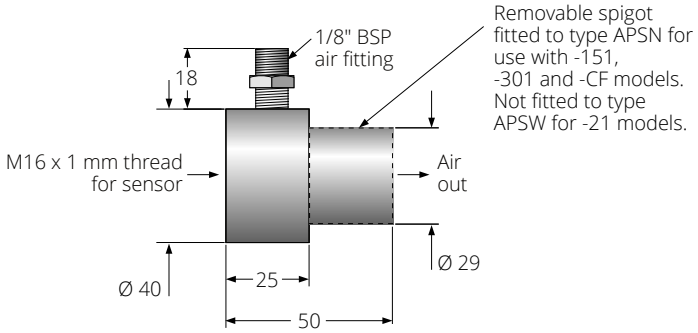

All dimensions in mm

ELECTRICAL INSTALLATION

2-wire Models (4-20 mA Output)

Wire Tag	Function
PWR+	Power +24 V DC (4-20 mA loop)
PWR-	Power 0 V DC (4-20 mA loop)
(no tag)	Shield drain

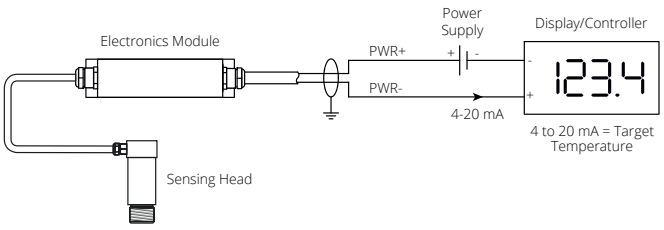

4-wire Models (Thermocouple Output)

Wire Tag	Function
PWR+	Power +24 V DC *
PWR-	Power 0 V DC *
OP+	Output +
OP-	Output -
(no tag)	Shield drain

* Sensing head internal temperature is provided as a 4-20 mA signal on the power loop. It is possible to use the sensor without measuring this signal; in that case power should be connected directly to PWR+ and PWR-.

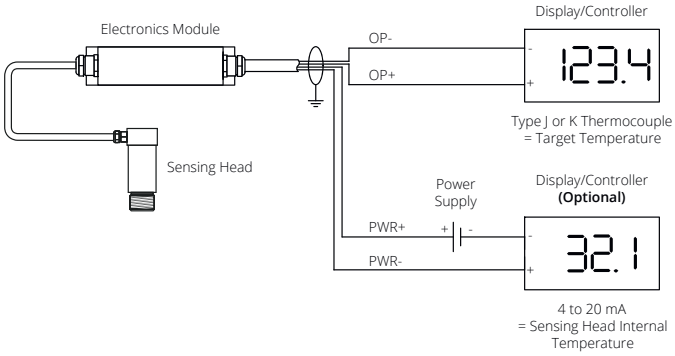

4-wire Models (Voltage Output)

Wire Tag	Function
PWR+	Power +24 V DC
PWR-	Power 0 V DC
OP+	Target Temperature Output +
OP-	Target Temperature Output -
(no tag)	Shield drain

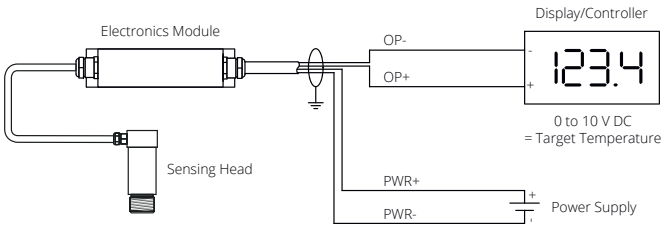

MODEL NUMBERS

PMO - 151 - MT - C - 10M

Output Cable Length
(blank) Standard output cable length (1 m)
nM Extended output cable (n = total length in m)
Maximum output cable length: 30 m

Note: Sensing head cable length is 3 metres.

Output
C 2-wire, 4-20 mA
V 4-wire, 0-10 V DC
J 4-wire, Type J Thermocouple
K 4-wire, Type K Thermocouple

Temperature Range
LT -20°C to 100°C
MT 0°C to 250°C
HT 0°C to 500°C

Optics
21 2:1 wide-angle optics
151 15:1 general-purpose optics
301 30:1 narrow-angle optics
CF Close Focus optics (measured spot diameter 5 mm at distance 100 mm)
XCF Close Focus optics (measured spot diameter 3.5 mm at distance 50 mm)

PMO PyroMini OEM infrared temperature sensor with miniature sensing head and separate electronics module

OPTIONS AND ACCESSORIES

CALCERTA	Calibration certificate
LSTS	Laser sighting tool
ABS	Adjustable mounting bracket
FBS	Fixed mounting bracket
APSN	Air purge collar (15:1, 30:1, Close Focus optics)
APSW	Air purge collar (2:1 optics)

Calex Electronics Limited
PO Box 2, Leighton Buzzard, Bedfordshire, England LU7 4AZ
Tel: +44 (0) 1525 373178
mail@calex.co.uk www.calex.co.uk

Issue E - Feb 2020
Specifications subject to change without notice