O4P201

Retro-reflective sensor

O4P-HPKG/US100

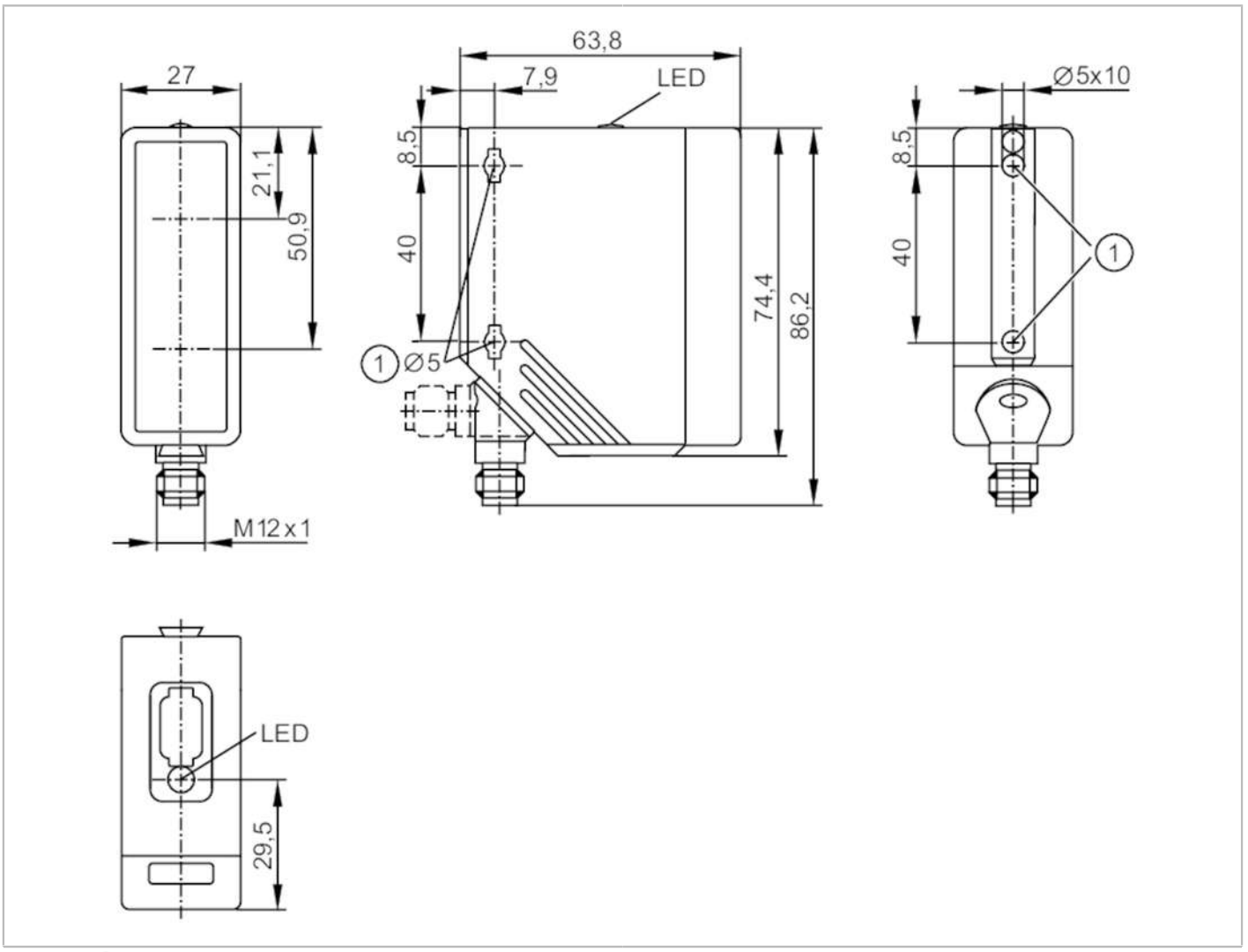

Product characteristics		
Type of light		red light
Housing		rectangular
Application		
Special feature		polarisation filter
Function principle		Retro-reflective sensor
Electrical data		
Operating voltage	[V]	10...36 DC; ("supply class 2" to cULus)
Current consumption	[mA]	20
Protection class		II
Reverse polarity protection		yes
Type of light		red light
Wave length	[nm]	624
Outputs		
Electrical design		PNP

O4P201

Retro-reflective sensor

O4P-HPKG/US100

Output function		light-on mode
Max. voltage drop switching output DC	[V]	2.5
Permanent current rating of switching output DC	[mA]	200
Switching frequency DC	[Hz]	1000
Short-circuit protection		yes
Type of short-circuit protection		pulsed
Overload protection		yes
Detection zone		
Range referred to prismatic reflector	[m]	0.3...18; (Prismatic reflector Ø 80 E20005)
Range adjustable		no
Max. light spot diameter	[mm]	500
Light spot dimensions refer to		at maximum range
Polarisation filter available		yes
Operating conditions		
Ambient temperature	[°C]	-25...60
Protection		IP 67
Tests / approvals		
EMC		EN 60947-5-2
MTTF	[years]	495
Mechanical data		
Weight	[g]	119
Housing		rectangular
Dimensions	[mm]	74.4 x 27 x 63.8
Materials		housing: PA; bezel: stainless steel; LED window: PC
Lens material		PMMA
Lens alignment		side lens
Displays / operating elements		
Display		switching status: 1 x LED, yellow
Remarks		
Pack quantity		1 pcs.
Electrical connection		

Connector: 1 x M12; coding: A



O4P201

Retro-reflective sensor

O4P-HPKG/US100

Connection

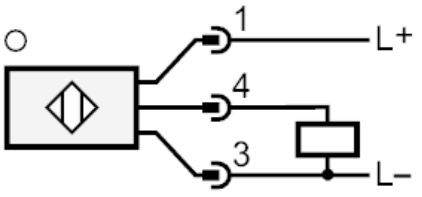

Diagrams and graphs

excess gain graph

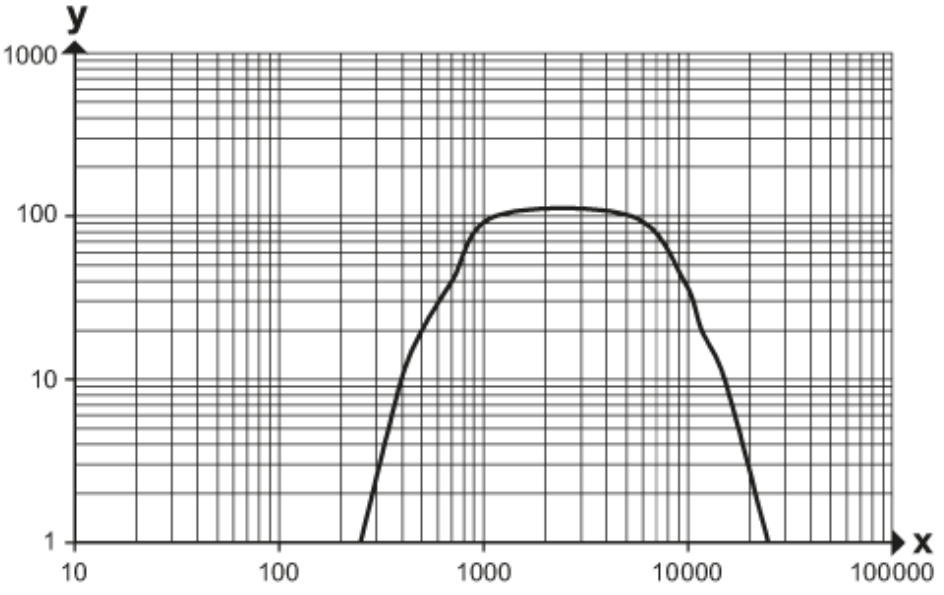

x: Abstand [mm]

y: Funktionsreservefaktor