HIGH-PERFORMANCE FAN HEATER

DCR 130 | DC 24 V, DC 56 V – 200 W to 800 W



- > High DC heating performance
- > Integrated thermostat or hygrostat (optional)
- > Small hysteresis
- > Integrated switch module
- > Optional clip or screw fixing
- > Optical indicator (LED)

The compact high performance fan heater prevents formation of condensation and frost and provides an evenly distributed interior air temperature in enclosures with electric/electronic components. The fan heater is available with an integrated electronic thermostat or electronic hygrostat. The model with thermostat is available with internal or external sensor. The fan heater with integrated hygrostat is equipped with an external sensor. The external sensor can be positioned freely anywhere in the enclosure for precise measurements of temperature and humidity. The DCR 130 was designed for wall fixing. For fixing on the bottom of the enclosure the fan heater DCR 030 is recommended.

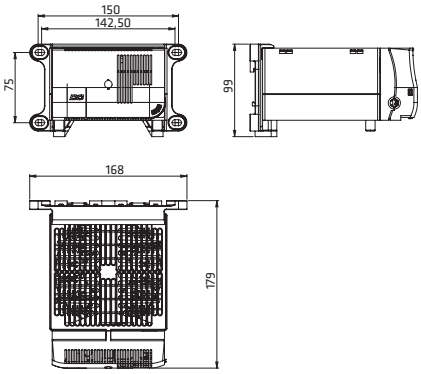

TECHNICAL DATA

Heating element	high performance cartridge
Temperature safety cut-out	with automatic reset and second-tier one shot fuse to protect against overheating in case of fan failure
Heater body	extruded aluminium profile
Axial fan, ball bearing	airflow 160 m^3/h, free flow service life 50,000 h at +25 °C (+77 °F)
Connection	2-pole „Push-In“ connection clamp stranded wire[1] 1.5 mm^2 (AWG 12) with strain relief; max. 2.5 mm^2 (AWG 12)
Casing	plastic according to UL94 V-0, black
Mounting	clip for 35 mm DIN rail, EN 60715 or screw fixing (M6), torque 2 Nm max., washers have to be used
Fitting position	vertical airflow (air outlet up)
Dimensions	179 x 168 x 99 mm
Weight	approx. 1.3 kg
Operating temperature	-20 to +75 °C (-4 to +167 °F)
Storage temperature	-40 to +80 °C (-40 to +176 °F)
Operating / Storage humidity	max. 90 % RH (non-condensing)
Protection type / Protection class	IP20 / II (double insulated)
Approvals	UL File No. E234324, VDE, EAC
Note	other versions (heating capacities, setting ranges) as well as operating voltage DC 48 V on request

[1] When connecting with stranded wires, wire end ferrules must be used.

Connection diagram

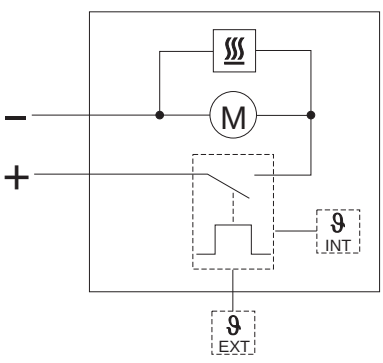

www.stego.de | www.stego.co.uk | www.stegonorden.se

30.11.2017 | Specifications are subject to change without notice. Errors and omissions excepted. Suitability of this product for its intended use and any associated risks must be determined by the end customer/buyer in its final application.

Art. No.	Model	Operating voltage	Heating capacity	Recommended pre-fuse T (time-delay)	Setting range[3] temperature / humidity
13092.1-12	Thermostat with internal sensor	DC 24 V	200 W	25.0 A	-20 to +40 °C
13092.1-13	Thermostat with connector for external sensor[2]	DC 24 V	200 W	25.0 A	-20 to +40 °C
13097.3-12	Thermostat with internal sensor	DC 56 V	800 W	25.0 A	-20 to +40 °C
13097.3-13	Thermostat with connector for external sensor[2]	DC 56 V	800 W	25.0 A	-20 to +40 °C
13092.1-03	Hygrostat with connector for external sensor[2]	DC 24 V	200 W	25.0 A	40 to 90 % RH
13095.3-03	Hygrostat with connector for external sensor[2]	DC 56 V	600 W	25.0 A	40 to 90 % RH

[2] The external sensor needs to be ordered separately.
[3] Switch difference temperature: 3 K (±1 K tolerance) at +25 °C (+77 °F), 50 % RH; switch difference humidity: 4 % RH (±1 % tolerance) at +25 °C (+77 °F), 50 % RH.

ACCESSORIES

The external sensor is not included in the delivery of the DCR 130. It can be ordered separately.

EXTERNAL SENSOR

The external sensor can be positioned freely anywhere in the enclosure for precise measurements of temperature and humidity.

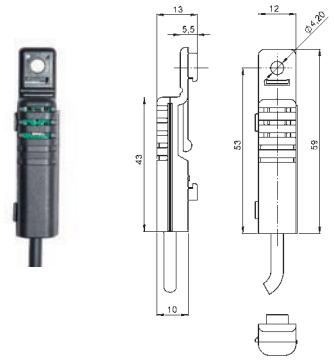

Art. No.	Length
267071	1 m
267072	2 m
267126	3 m

www.stego.de | www.stego.co.uk | www.stegonorden.se

30.11.2017 | Specifications are subject to change without notice. Errors and omissions excepted. Suitability of this product for its intended use and any associated risks must be determined by the end customer/buyer in its final application.