Brand of NTN corporation

Technical data

USF207

Bearing units



Grey cast housing, radial insert ball bearing with socket set screws, single lip seal

KIT CONTENT

US207G2, F207

VISUAL (S)

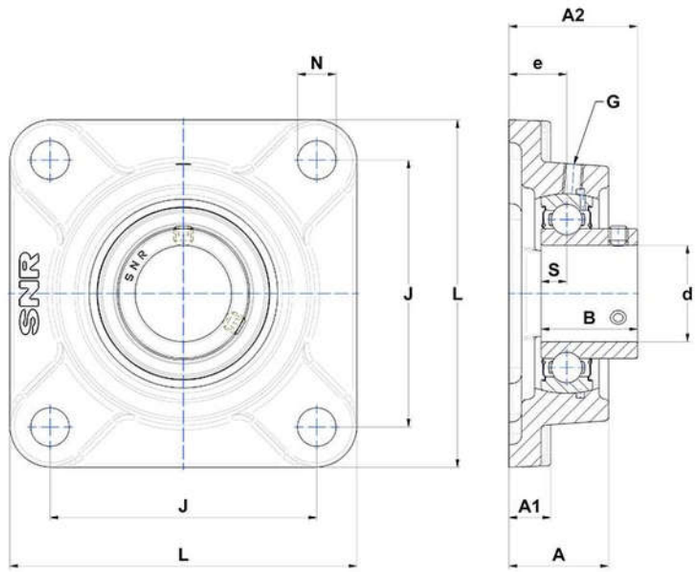

PRODUCT DEFINITION

Brand	SNR
A - Housing height	34 mm
A1 - Housing foot height / flange height	15 mm
A2 - Total height from mounting surface	42,5 mm
B - Width of Inner Ring	32 mm
d - Shaft diameter	35 mm

NTN Europe
1 rue des Usines · BP 2017 · 74010 Annecy Cedex · France · Tel. +33 (0)4 50 65 30 00
S.A. au capital de 322 639 919 € · RCS ANNECY B 325 821 072 · Id. Fiscale : FR 48 325 821 072
SIRET 325 821 072 00015 · Code APE 2815 Z · Code NACE 28.15

PRODUCT DEFINITION	
e - Distance mounting surface to bearing center	19 mm
G - Grease fitting	M6x1
J - Mounting holes distance	92 mm
L - Housing width / diameter	117 mm
N - Mounting hole dimension	14 mm
S - Distance front side/bearing centre	8,5 mm

PRODUCT PERFORMANCE	
C - Dynamic load rating	25700000 mN
C0 - Static load rating	15200000 mN
Operating temperature min.	253,15 °K
Operating temperature max.	373,15 °K

OTHER FEATURES	
Mass	1,45 kg
Recommended tightening torque for set screw	5.5 N-m