TABLE 1

MOLEX P/N	ENG. NO.	LED
1202510055	BKB8010-FBC	NO
1202510056	BKB801P-FBC	YES
1202510057	BKB801N-FBC	YES

TABLE 2 BILL OF MATERIAL

ITEM	DESCRIPTION	MATERIAL	FINISH
1	LABEL	ABS	WHITE
2	SHELL	BRASS	NICKEL PLATED
3	O-RING	NBR	BLACK
4	O-RING	NBR	BLACK
5	CONTACT	BRASS	GOLD OVER NICKEL
6	CONTACT	BRASS	GOLD OVER NICKEL
7	CONTACT	BRONZE	GOLD OVER NICKEL
8	O-RING	FPM	RED
9	LED	NO LED = PA	BLACK
		WITH LED = PA	TRANSPARENT
10	SHELL	BRASS	NICKEL PLATED
11	HOUSING	PBT	BLACK

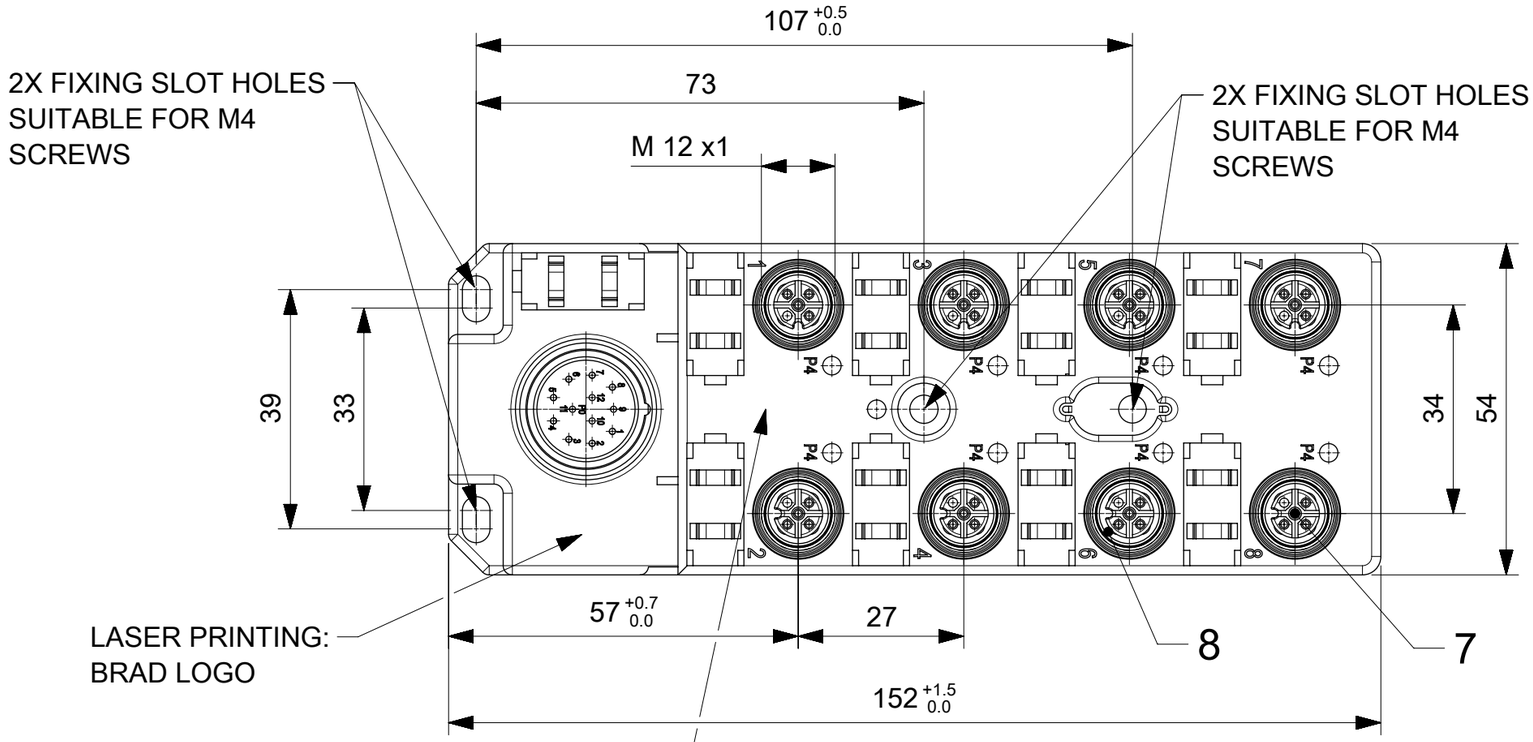

SCALE 1:1

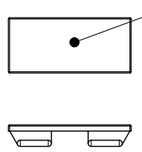

LABEL
9x packed in a bag

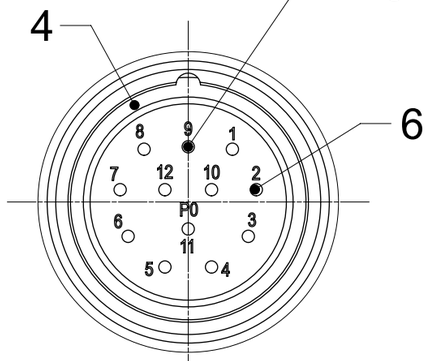

SCALE
2:1

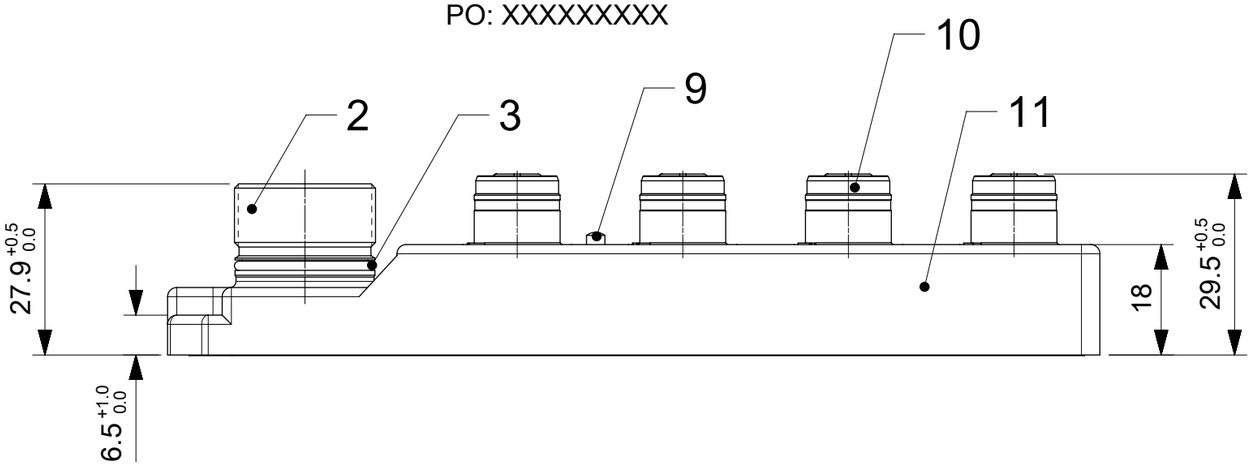

GENERAL CHARACTERISTICS:

ELECTRICAL AND MECHANICAL DATA ACC. TO IEC 61076-2-101

NOMINAL VOLTAGE:	10-30 V DC
AMPERE RATING:	4 A PER PORT / 12 A MAX
AMPERE RATING WITH UL REGISTRATION:	3 A PER PORT / 9 A MAX
IP DEGREE OF PROTECTION:	IP 67
TEMPERATURE RANGE:	-25°C to + 85°C

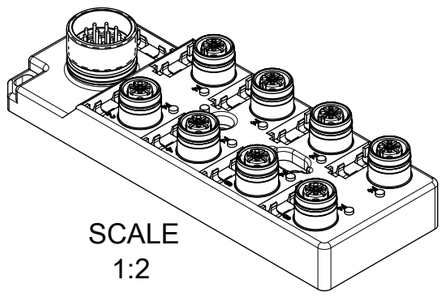

SCALE
1:2

DOCUMENT STATUS	P1	RELEASE DATE	2020/01/17 08:23:47

FORMAT: master-tb-prod-A3
REVISION: H
DATE: 2018/01/18

SYMBOLS
FA = 0
FC = 0
FB = 0
S = 0
▼ = 0
C = 0
☒ = 0
■ = 0
V = 0

DIMENSION UNITS: mm
SCALE: 1:1
GENERAL TOLERANCES (UNLESS SPECIFIED)
ANGULAR TOL ± 1.0 °
4 PLACES ±
3 PLACES ±
2 PLACES ± 0.05
1 PLACE ± 0.3
0 PLACES ± 0.5
DRAFT WHERE APPLICABLE MUST REMAIN WITHIN DIMENSIONS

THIS DRAWING CONTAINS INFORMATION THAT IS PROPRIETARY TO MOLEX ELECTRONIC TECHNOLOGIES, LLC AND SHOULD NOT BE USED WITHOUT WRITTEN PERMISSION

CURRENT REV DESC:

EC NO: 630686
DRWN: SSM 2018/12/04
CHK'D: RSILLER 2020/01/17
APPR: RSILLER 2020/01/17

INITIAL REVISION:
DRWN: SSM 2018/12/04
APPR: RSILLER 2020/01/17

THIRD ANGLE PROJECTION | DRAWING: A3-SIZE | SERIES: 120251

molex

MPIS U12 NON 4P 8PT M23 BK SINGLE

PRODUCT CUSTOMER DRAWING

DOCUMENT NUMBER	DOC TYPE	DOC PART	REVISION
1202510055	PSD	000	A

MATERIAL NUMBER	CUSTOMER	SHEET NUMBER
SEE TABLE 1	GENERAL MARKET	1 OF 2

Wiring Diagram NON LED

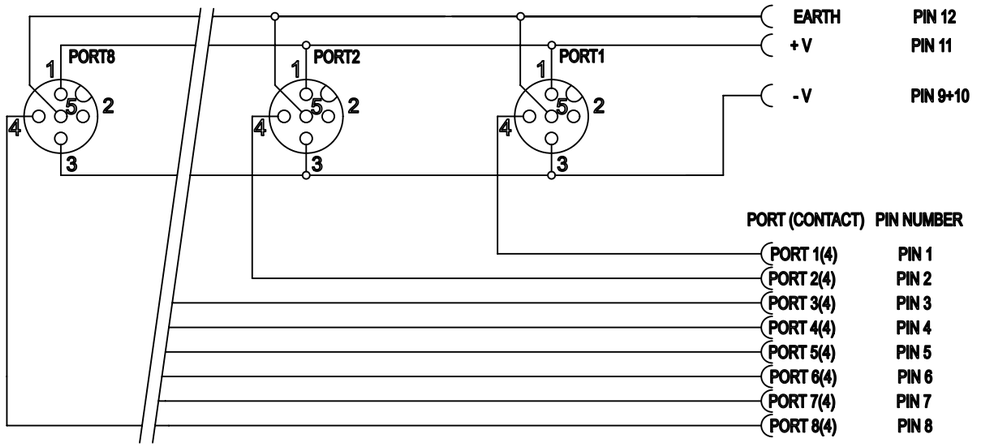

Wiring Diagram PNP

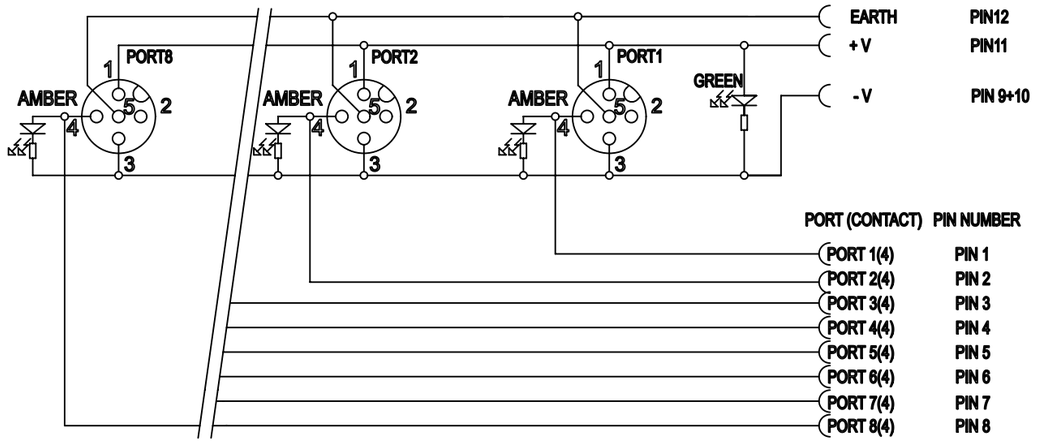

Wiring Diagram NPN Single

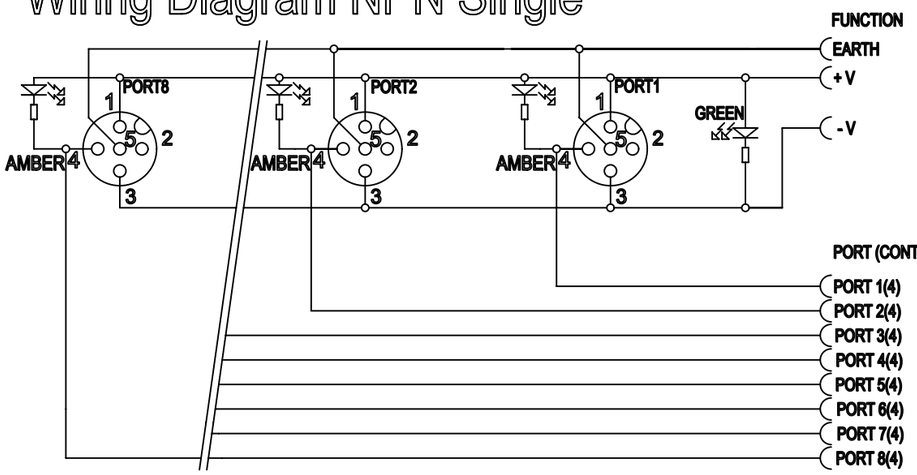

THIS DRAWING CONTAINS INFORMATION THAT IS PROPRIETARY TO MOLEX ELECTRONIC TECHNOLOGIES, LLC AND SHOULD NOT BE USED WITHOUT WRITTEN PERMISSION

SYMBOLS	DIMENSION UNITS	SCALE
= 0	mm	1:1

GENERAL TOLERANCES (UNLESS SPECIFIED)		
ANGULAR TOL	±	1.0 °
4 PLACES	±	
3 PLACES	±	
2 PLACES	±	0.05
1 PLACE	±	0.3
0 PLACES	±	0.5

DRAFT WHERE APPLICABLE MUST REMAIN WITHIN DIMENSIONS

CURRENT REV DESC:

EC NO: 630686
DRWN: SSM 2018/12/04
CHK'D: RSILLER 2020/01/17
APPR: RSILLER 2020/01/17

INITIAL REVISION:
DRWN: SSM 2018/12/04
APPR: RSILLER 2020/01/17

THIRD ANGLE PROJECTION

DRAWING: A3-SIZE
SERIES: 120251

molex

MPIS U12 NON 4P 8PT M23 BK SINGLE

PRODUCT CUSTOMER DRAWING

DOCUMENT NUMBER	DOC TYPE	DOC PART	REVISION
1202510055	PSD	000	A

MATERIAL NUMBER	CUSTOMER	SHEET NUMBER
SEE TABLE 1	GENERAL MARKET	2 OF 2

DOCUMENT STATUS	P1	RELEASE DATE	2020/01/17 08:23:47

FORMAT: master-tb-prod-A3
REVISION: H
DATE: 2018/01/18