LED MULTI-FUNCTION LIGHT
ABL / ABS LED-HI



- Designed for tough requirements under industrial conditions.
- Extreme bright 75 cd with high signaling effect.
- Suitable for indoor and outdoor use, brightness adjustable.
- Extremely insensitive to shock and vibration.
- 3 selectable operating modes as standard:
  – Continuous light
  – Blinking light
  – Flashing light
- 24 V AC/DC devices as standard with inrush current limitation.
- Inexpensive and flexible; wide range power supplies as standard.
- Metal housing, optional with protective case.

IP 54 protection system

+55 °C / –40 °C operating temperature

brightness adjustable

10 Years warranty

EAC

PRODUCT		ABL / ABS LED-HI		
DATA				
Rated voltage		115/230 V		24 V
		AC 50 I 60 Hz / DC		DC
Operating range		90–253 V		11–60 V
Current consumption (@ 1 Hz flash)		50 mA @ 230 V AC		165 mA @ 24 V DC
Operating mode internally and externally selectable (DC)		continuous light	blinking light	flashing light
Light alternation frequency			1 Hz / 2 Hz	0.1 Hz / 0.5 Hz / 0.75 Hz / 1 Hz / 2 Hz
Light source		4 high output LED		
Light intensity (DIN 5037) [1]		75 cd (reducible)		
Max. viewing distance		201 m		
Operating temperature		–40 °C ... +55 °C		
Storage temperature		–40 °C ... +70 °C		
Relative humidity		100 %		
Protection system (EN 60529)		IP 54		
Service life of the light source		≥50,000 hrs		
Material	lens	polycarbonate (PC)		
	housing	aluminium (AL MgSi1), anodised		
	base	polycarbonate (PC) with fiberglass		
Cable entry		M20 x 1.5		
Connecting terminal		cage clamp 0.08–2.5 mm²		
Weight		650 g / 800g		

[1] with a clear lens

DIMENSIONS

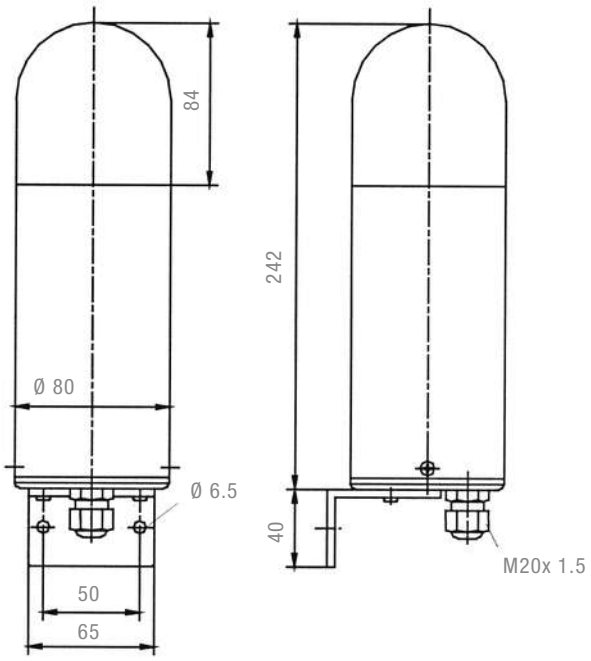

ARTICLE NO.	ABL LED - HI	ABS LED - HI
LENS COLOUR	230 V AC / DC	24 V DC
	21118643000	21118633000
	21118644000	21118634000
	21118645000	21118635000

Article numbers for other colours and voltages on request.

OPTIONS/ACCESSORIES



Article no.
28710500042

CONFORMITY TO STANDARDS

The visual characteristics of flashing lights conform to the European standard DIN EN 842; **“Machine safety – visual alarm signals”.**
Requirements contained in the DIN EN 981 standard; **“Machine safety – system of acoustic and visual alarm and information signals”,** can be fulfilled.

The colours “red” for the emergency signal and “yellow” for the warning signal conform to the requirements of IEC 73 / DIN EN 60073 / VDE 0199; **“Coding of display devices and control elements using colours and supplementary means”.**

References to visual alarm devices can be found in the following standards:

EN 60825-1	Radiation safety of laser devices, identical to IEC 825 and DIN-VDE 0837
DIN EN 54	Fire alarm systems
DIN 54113-2	Radiation protection regulations for the technical operation of X-ray equipment up to 500 kV