WIRING DIAGRAM

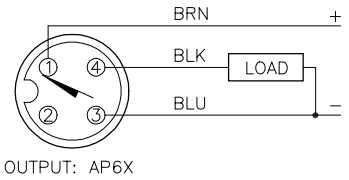

OUTPUT: AP6X

SHORT–CIRCUIT AND OVERLOAD PROTECTED

LOCKNUT LN–MT12

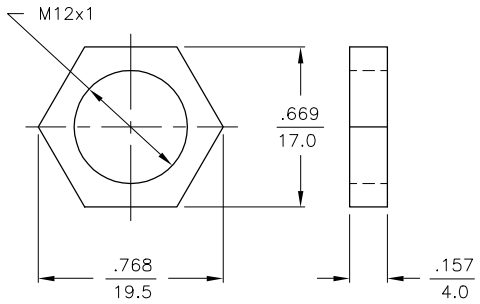

SPECIFICATIONS

OPERATING VOLTAGE	10–30 VDC
RIPPLE	≤ 10%
DIFFERENTIAL TRAVEL (HYSTERESIS)	3–15% (5% TYPICAL)
VOLTAGE DROP ACROSS CONDUCTING SENSOR	≤ 1.8 V at 200 mA
OUTPUT FUNCTION	NORMALLY OPEN 3–WIRE DC SELF–CONTAINED
TTL COMPATIBLE	NO
SHORT–CIRCUIT PROTECTED	YES
TRIGGER CURRENT FOR OVERLOAD PROTECTION	≥ 220 mA
CONTINUOUS LOAD CURRENT	≤ 200 mA
OFF–STATE (LEAKAGE) CURRENT	< 100 uA
NO–LOAD CURRENT	≤ 15 mA
TIME DELAY BEFORE AVAILABILITY	≤ 8 ms
POWER–ON EFFECT PROTECTION	PER IEC 947–5–2
REVERSE POLARITY PROTECTION	INCORPORATED
WIRE–BREAK PROTECTION	INCORPORATED
PROTECTION AGAINST TRANSIENTS	PER EN 60947–5–2
OPERATING TEMPERATURE (10% DRIFT)	–25°C to +70°C (–13°F to +158°F)
OPERATING TEMPERATURE (15% DRIFT)	–30°C to +85°C (–22°F to +185°F)
ENCLOSURE	MEETS NEMA 1, 3, 4, 6, 13 AND IEC IP67
SHOCK	30 g, 11 ms
VIBRATION	55 Hz, 1 mm AMPLITUDE (IN ALL 3 PLANES)
LED FUNCTION	RED: OUTPUT ENERGIZED
RATED OPERATING DISTANCE(Sn)	8 mm = .315" (NOMINAL)
SWITCHING FREQUENCY	2000 Hz
REPEATABILITY	≤ 2% of RATED OPERATING DISTANCE
EMBEDDABLE (SHIELDED)	NO

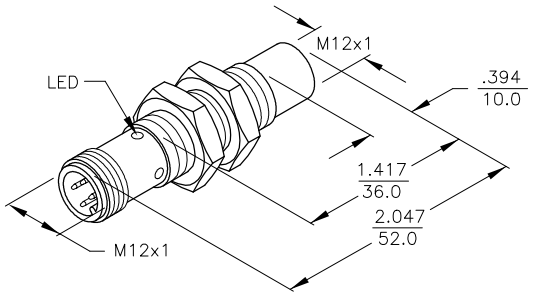

NOTE
PRELIMINARY
SPECIFICATIONS

NOTES:

1. UPROX HAS WELD FIELD IMMUNITY, SENSOR IS SUITABLE FOR USE ON RESISTANCE MACHINES.

REV	DESCRIPTION	BY	DATE	ECO NO.
P2		CBM	09/03/99	

RELATED DOCUMENTS
1.
2.
3.
4.

3RD ANGLE PROJECTION

THIS DOCUMENT IS PROPERTY OF TURCK INC. USE OF THIS DOCUMENT WITHOUT WRITTEN PERMISSION IS PROHIBITED.

TURCK INC
High Technology Sensors and Automation Controls
3000 CAMPUS DRIVE
MINNEAPOLIS, MN 55441
1–800–544–7769
(763) 553–7300
(763) 553–0708 fax
turck.com

MATERIAL: BRASS BARREL

FINISH: COPPER/NICKEL CHROME PLATING

TOLERANCES UNLESS OTHERWISE SPECIFIED
.X ±0.02
.XX ±0.01
.XXX ±0.005
ANGLES ±1°
ALL MILLIMETER DIMENSIONS ARE REFERENCE ONLY

DRFT: CBM
DATE: 09/03/99
DSGN:
SCALE: NONE

UNIT OF MEASUREMENT
INCH [MILLIMETER]
DO NOT SCALE THIS DRAWING

DESCRIPTION: Ni 8U–M12–AP6X–H1141
IDENTIFICATION NO.: M1644140
REV: P2
FILE: M1644140
SHEET 1 OF 1

This Document Was Officially Certified By TURCK Inc. On 1/28/2003 3:33:31 PM