stay connected

MSUD VALVE PLUG FORM A 18MM

PUR 5X0.75 black 1.5m

Form A (18 mm) for pressure switch
24 V DC with LED (red/green)

Further cable lengths on request. Plastic housings with good resistance against chemicals and oils. The resistance to aggressive media should be individually tested for your application. Further details on request.

Link to Product

Illustration



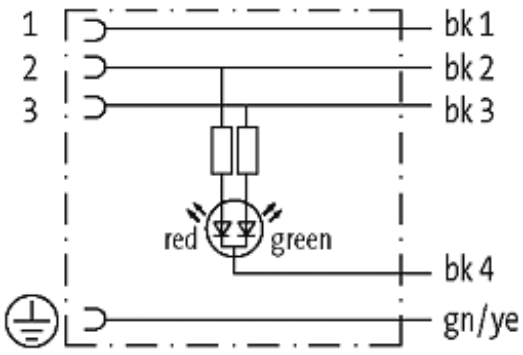

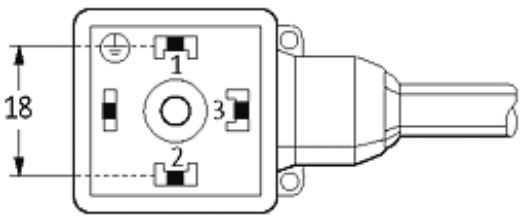

The information in this brochure has been compiled with the utmost care.
Liability for the correctness completeness and topicality of the information is restricted to gross negligence. Version: 05/15

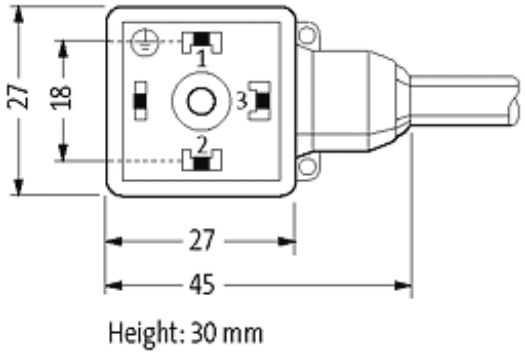

Product may differ from Image

Approvals

Form

	18121

Technical Data

Operating voltage	24 V DC ±25 %
Operating current per contact	max. 4 A
Locking of ports	M3 (recommended torque 0.4 Nm)
Housing	Black plastic (gray on request)
Protection	IP67 inserted and tightened (EN 60529)

Cables

Cable number	628
No./diameter of wires	5 × 0.75 mm²
Wire isolation	PVC (bk, num, gnye)
C-track properties	2 Mio.
Jacket Color	black
Shore hardness outer jacket	85 ± 5A
Material (jacket)	PUR/PVC (UL/CSA)
Outer diameter	approx. 7.0 mm
Bend radius (fixed)	10 × outer Ø
Bend radius (moving)	15 × outer Ø
Temperature range (fixed)	-30...+80 °C
Temperature range (mobile)	-5...+80 °C

General data

Temperature range	-25...+85 °C, depending on cable quality

Commercial data

country of origin	CZ

The information in this brochure has been compiled with the utmost care.
Liability for the correctness completeness and topicality of the information is restricted to gross negligence. Version: 05/15

customs tariff number	85444290
minimum order quantity	1

The information in this brochure has been compiled with the utmost care.
Liability for the correctness completeness and topicality of the information is restricted to gross negligence. Version: 05/15