# 6308-2RS1

SKF Explorer

## Dimensions

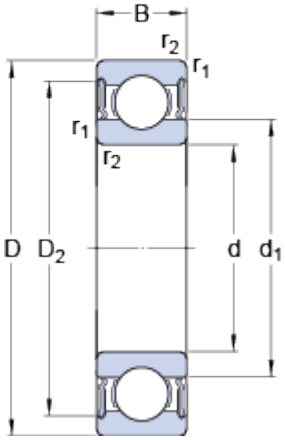


| | | | |
|---|---|---|---|
| d | | 40 | mm |
| D | | 90 | mm |
| B | | 23 | mm |
| $d_1$ | | 56.11 | mm |
| $D_2$ | | 77.7 | mm |
| $r_{1,2}$ | min. | 1.5 | mm |

## Abutment dimensions

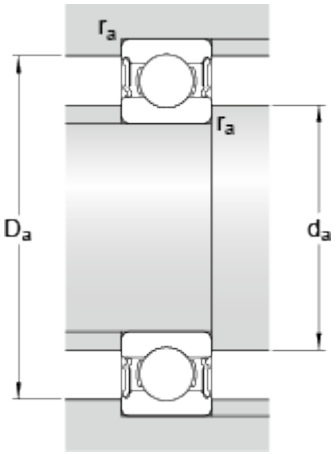


| | | | |
|---|---|---|---|
| $d_a$ | min. | 49 | mm |
| $d_a$ | max. | 56 | mm |
| $D_a$ | max. | 81 | mm |
| $r_a$ | max. | 1.5 | mm |

## Calculation data

| | | | |
|---|---|---|---|
| Basic dynamic load rating | C | 42.3 | kN |
| Basic static load rating | $C_0$ | 24 | kN |
| Fatigue load limit | $P_u$ | 1 | kN |
| Limiting speed | | 5000 | r/min |
| Calculation factor | $k_r$ | 0.03 | |
| Calculation factor | $f_0$ | 13.2 | |

## Mass

| | | | |
|---|---|---|---|
| Mass bearing | | 0.646 | kg |