Part Number:	**010029**
Description:	**Packaged part #**
4107	**Bulk part #**

(1) BU-24APN

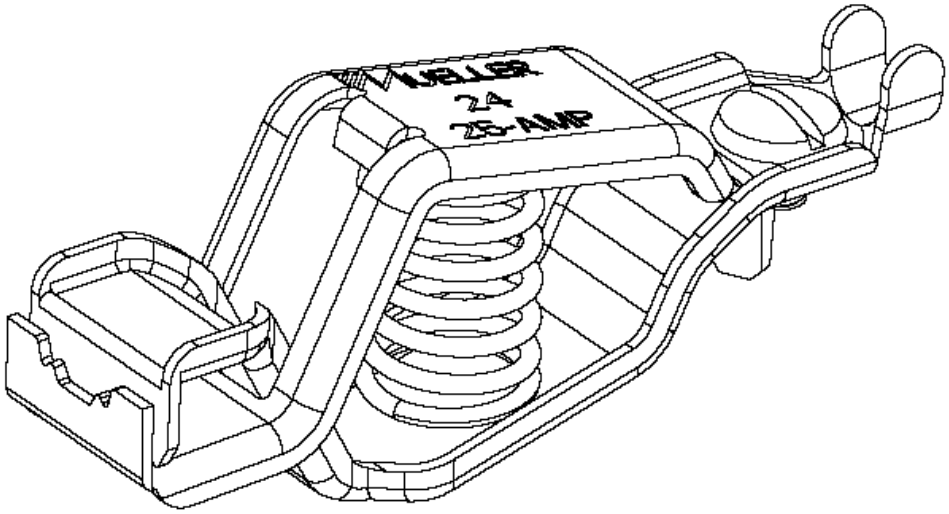

(2) BU-24APS

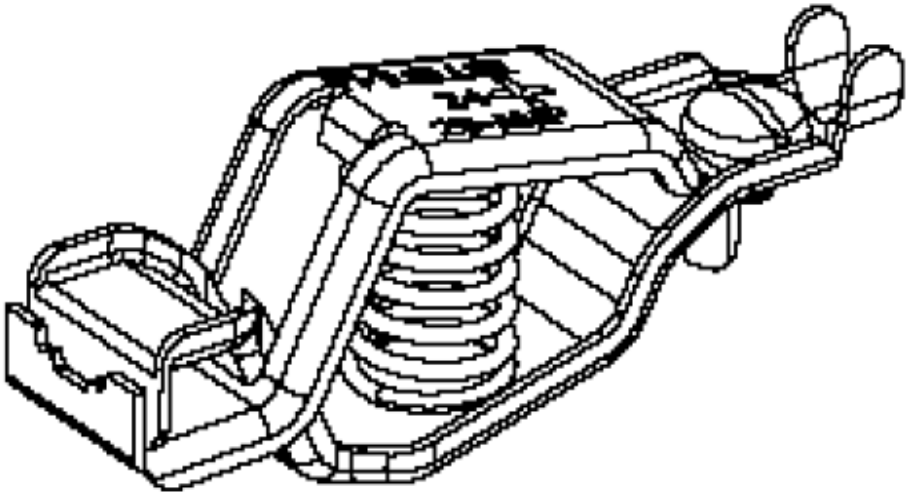

- #010029 Packaged parts
- Includes: BU-24APN (1)
  BU-24APS (1)
- More details about bulk parts number refer to relative datasheets

Mueller Electric Company
1625 E. 31st Street
Cleveland, Ohio 44114

ISO 9001:2000
Over 95 Years Of Innovation
www.muellerelectric.com

TEL. 800-955-2629
TEL. 216-771-5225
FAX. 216-771-3068