UT0039

Thermowell for temperature sensors

THERMOWELL ACCESSORY D6/1-1/4-18 UNEF

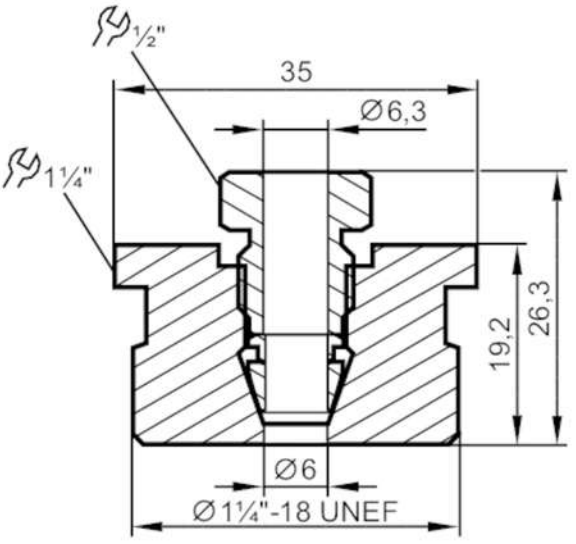

Application		
Design		for temperature sensors Ø 6 mm
Pressure rating	[bar]	10
Mechanical data		
Weight	[g]	113.398
Materials		stainless steel (1.4404 / 316L); clamping ring: PA 6.6
Tightening torque	[Nm]	45
Sensor connection		clamp adapter Ø 6 mm
Process connection		1 1/4" - 18 UNEF
Remarks		
Pack quantity		1 pcs.