

SLS 10 B schwarz/black

Measuring and Testing Equipment:Plugs:4 mm sliding sleeve system

Product description	
Description	Banana plug, protected against touch, may be made up into cables with solder connection for cross-sections up to 2.5 mm², insulated by latching and sprung insulating sleeve which is only released by pressure on the side-mounted locking spring. 4 mm diameter..
Type	SLS 10 B schwarz/black
Order No.	931 824-100
System	4 mm sliding sleeve system
Housing Color	black
Other standard types	red color, order no. 931 824-101

Drawing

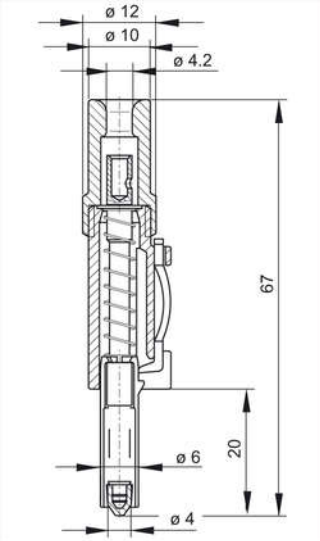

Technical data	
Pin dimensions	4 mm with laminated spring
Type of contact	pin (spring loaded)
Type of termination	soldered
Rated voltage	DC 60 V
Rated current	30 A
Contact resistance	5 mOhm
Material	
Contact material	copper beryllium
Contact surface material	nickel-plated
Housing material	POM
Environmental conditions	
Temperature range	-25 °C to +80 °C
Inflammability class	